ORIGINAL INSTRUCTIONS - *according to Directive 2006/42/EC, Annex I 1.7.4.1*

CX145C SR
Crawler Excavator

OPERATOR'S MANUAL

Part number 47510027
1st edition English
April 2013
Replaces part number 47482502

CASE CONSTRUCTION

Contents

1 GENERAL INFORMATION

Safety rules 1-1
Safety rules 1-2
Note to the Owner 1-3
Product identification 1-5
Left, right, front and rear of the machine 1-9
Electro-magnetic interference (EMC) 1-9
Description of the main components 1-10

2 SAFETY INFORMATION

Safety rules 2-1
Safety decals 2-8
Hand signals 2-28

3 CONTROLS/INSTRUMENTS

ACCESS TO OPERATOR'S PLATFORM

Frame - Access/Exit 3-1
Position of the operator’s compartment controls and accessories 3-3

OPERATOR'S SEAT

Air suspension seat adjustments 3-5

FORWARD CONTROLS

Hand control levers and pedals 3-9
Windshield 3-16
Front lower window 3-17
Front right-hand console 3-18
Cigarette lighter or electrical socket (24 volts) 3-18
System display and function control panel 3-19
Monitor switches 3-24
Menu screen display 3-27
Diesel particulate diffuser (DPD) 3-37
Clock adjustment 3-48

LEFT-HAND SIDE CONTROLS

Left-hand control arm 3-49
Function cancellation lever 3-51
Heating, ventilation or air-conditioning control 3-52
Emergency exit hammer 3-56
Tool quick coupler locking and unlocking control switch (Optional) 3-56
Sliding windows on door 3-57
Magazine rack 3-57
Coat hanger hook 3-57

RIGHT-HAND SIDE CONTROLS

Right-hand control arm 3-58
Cab radio 3-60
Right-hand console 3-62
Cup holder 3-62
Dozer blade control lever (standard machine only) 3-63

REARWARD CONTROLS

Fuse box 3-64

OVERHEAD CONTROLS

Roof curtain 3-65
Roof hatch 3-65
Sun shield (optional) 3-66
Cab internal lighting 3-66

EXTERIOR CONTROLS

Fuel tank 3-67
Rear view mirrors 3-68
Rear view camera 3-71
Side doors 3-72
Battery master switch (if equipped) 3-73
Engine hood 3-74
Lower panels 3-75
Windshield washer reservoir 3-75
Load handling eyes 3-76
Towing holes 3-77
Safety valves (optional) 3-78
Optional tool supply valves (optional) 3-78
Fuel tank filler pump (if equipped) 3-79
Cab protection (ROPS and FOPS) 3-81

4 OPERATING INSTRUCTIONS

COMMISSIONING THE UNIT

Cab - Operating 4-1
Cab - Running-in Procedure 4-3

STARTING THE UNIT

Anti-theft protection 4-4
Starting the engine 4-7
Bringing the machine up to operating temperature 4-9
Engine operation 4-10
Operating the machine in hot or cold weather 4-11
Machine operation 4-12

STOPPING THE UNIT

Stopping the engine 4-14

MOVING THE UNIT

Machine travel 4-15
Handling the machine 4-18
Load handling 4-20
Operating the machine 4-22
Quick coupler (optional) 4-24
Lowering the attachment in the event of a failure 4-29
Adjustment and mounting of rear view mirrors 4-30
Auxiliary hydraulic circuits 4-34
Optional hand control levers configuration 4-45

PARKING THE UNIT

Parking the machine 4-46

5 TRANSPORT OPERATIONS

SHIPPING TRANSPORT

Transporting the machine 5-1
Tie downs for shipping — Procedure 5-6
Transport setting for long arm machine 5-8
Towing 5-9

6 MAINTENANCE

GENERAL INFORMATION

Basic instructions 6-1
Fluids, fuels and lubricants 6-5
Fluid capacities and lubricant specifications 6-9
Grease points 6-10
Levels 6-22
Engine 6-24
Cooling system 6-27
Fuel system 6-30
Releasing pressure in the hydraulic system 6-37
Hydraulic circuit 6-39
Air filter 6-48
Swing reduction gear 6-51
Travel reduction gears 6-54
Tracks 6-56
Track rollers and idler wheels 6-59
Radiator and coolers 6-60
Fan and alternator drive belt 6-62
Adjustment of engine valve rocker clearances 6-63
Fuel tank filter 6-64

Fire extinguisher (not supplied) 6-64
Protecting the Electrical/Electronic Systems During Charging or Welding 6-65
Cab protection (ROPS and FOPS) (optional) 6-66
Machine inspection and cleaning 6-66
Checking the machine settings 6-66
Plastic and resin parts 6-67
Checking the cylinders for leaks 6-67
Tooth tip wear limits on the backhoe bucket 6-67
Replacing a tooth on a backhoe bucket 6-68
Replacing a backhoe bucket 6-69
Checking the opening of the quick coupler locking hook (optional) 6-71
Air conditioning 6-73
Diesel particulate diffuser (DPD) 6-76
Gas spring inspection 6-76
Torque specifications 6-77
Fuses 6-78
Batteries 6-80
Alternator 6-84
Starter motor 6-84
Bulb replacement 6-85

MAINTENANCE CHART
Maintenance Chart 6-87

STORAGE
Preparing for storage 6-90
Periodic checks 6-91
Starting up after storage 6-92

7 TROUBLESHOOTING
FAULT CODE RESOLUTION
Engine troubleshooting 7-1

8 SPECIFICATIONS
General specification 8-1
Noise level 8-4
Weight 8-5
Dimension 8-6

1 - GENERAL INFORMATION

Safety rules

Personal safety

This is the safety alert symbol. It is used to alert you to potential personal injury hazards. Obey all safety messages that follow this symbol to avoid possible death or injury.

Throughout this manual you will find the signal words DANGER, WARNING, and CAUTION followed by special instructions. These precautions are intended for the personal safety of you and those working with you.

Read and understand all the safety messages in this manual before you operate or service the machine.

⚠ DANGER indicates a hazardous situation that, if not avoided, will result in death or serious injury.

⚠ WARNING indicates a hazardous situation that, if not avoided, could result in death or serious injury.

⚠ CAUTION indicates a hazardous situation that, if not avoided, could result in minor or moderate injury.

FAILURE TO FOLLOW DANGER, WARNING, AND CAUTION MESSAGES COULD RESULT IN DEATH OR SERIOUS INJURY.

Machine safety

NOTICE: *Notice indicates a situation that, if not avoided, could result in machine or property damage.*

Throughout this manual you will find the signal word Notice followed by special instructions to prevent machine or property damage. The word Notice is used to address practices not related to personal safety.

Information

NOTE: *Note indicates additional information that clarifies steps, procedures, or other information in this manual.*

Throughout this manual you will find the word Note followed by additional information about a step, procedure, or other information in the manual. The word Note is not intended to address personal safety or property damage.

Safety rules

CALIFORNIA
PROPOSITION 65 WARNING
Diesel engine exhaust and some of its constituents
are known to the State of California to cause cancer,
birth defects and other reproductive harm.
Battery post, terminals and related accessories
contain lead and lead compounds.
Wash hands after handling

Note to the Owner

Improper operation of this machine can cause injury or death. Before using this machine, make certain that every operator:

- Is instructed in safe and proper use of the machine.
- Reads and understands the Manual(s) pertaining to the machine.
- Reads and understands ALL Safety Decals on the machine.
- Clears the area of other persons.
- Learns and practices safe use of machine controls in a safe, clear area before operating this machine on a job site.

It is your responsibility to observe pertinent laws and regulations and follow CASE CONSTRUCTION instructions on machine operation and maintenance.

Your machine has been designed and built to the highest standards of quality. It conforms to all current safety regulations. However, the risk of accidents can never be completely excluded. That is why it is essential to observe elementary safety rules and precautions.

Read this manual carefully, paying particular attention to the instructions concerning safety, operation and maintenance so as to avoid the risk of injury while operating or servicing the machine.

The standard attachments and tools of this machine are designed to carry out all kinds of earthmoving and rehandling operations. If you want to use this machine to handle a load (pipes, culverts, formwork, etc.), make sure that it is designed to carry out this kind of work. For this type of application, the machine must be equipped with safety valves, a load handling chart corresponding to the type of machine and its attachment and a load fixing point. All legal requirements must also be strictly observed.

Do not use this machine for any application or purpose other than those described in this manual. If the machine is to be used for work involving the use of special attachments, accessories or equipment, consult your CASE CONSTRUCTION Dealer in order to make sure that any adaptations or modifications made are in keeping with the machine's technical specifications and with prevailing safety requirements.

Any modification or adaptation which is not approved by the manufacturer may invalidate the machine's initial conformity with safety requirements.

The machine must undergo regular inspections, the frequency of which varies according to the type of use. Consult your CASE CONSTRUCTION Dealer.

ATTENTION: *The engine and fuel system on your machine is designed and built to government emissions standards. Tampering by dealers, customers, operators and users is STRICTLY PROHIBITED BY LAW. Failure to comply could result in government fines, rework charges, invalid warranty, legal action and possible confiscation of the machine until rework to original condition is completed. Engine service and/or repairs must be done by a certified technician only.*

Your CASE CONSTRUCTION Dealer is at your disposal for any further information. He will also provide any after-sales service you may require, and genuine CASE CONSTRUCTION spare parts, your guarantee of quality and match. CASE CONSTRUCTION customer assistance is also available. Call 1-866-54-CASE6 (1-866-542-2736) or email casecustomerassistance.na@cnh.com.

You can obtain manuals on the operation, maintenance and repair of your machine from your CASE CONSTRUCTION Dealer. To ensure quick and efficient service, consult your CASE CONSTRUCTION Dealer for assistance in ordering the correct manuals for your machine.

Your CASE CONSTRUCTION Dealer can provide after-sales service and genuine CASE CONSTRUCTION spare parts, your guarantee of quality and match.

CNH America LLC. Company reserves the right to make changes in the specification and design of the machine without prior notice and without incurring any obligation to modify units previously sold.

The description of the models shown in this manual has been made in accordance with the technical specifications known as of the date of design of this document.

All data given in this manual is subject to production variations. Dimensions and weights are provided with approximate values and the machine fitting shown in the illustrations may not correspond with standard models. For precise information on specific machine models and versions, please consult your CASE CONSTRUCTION Dealer.

Reproduction or translation, even partial, is prohibited without written authorization from **CNH America LLC**. Company.

Product identification

CX145C SR (standard type with monobloc boom) hydraulic crawler excavator

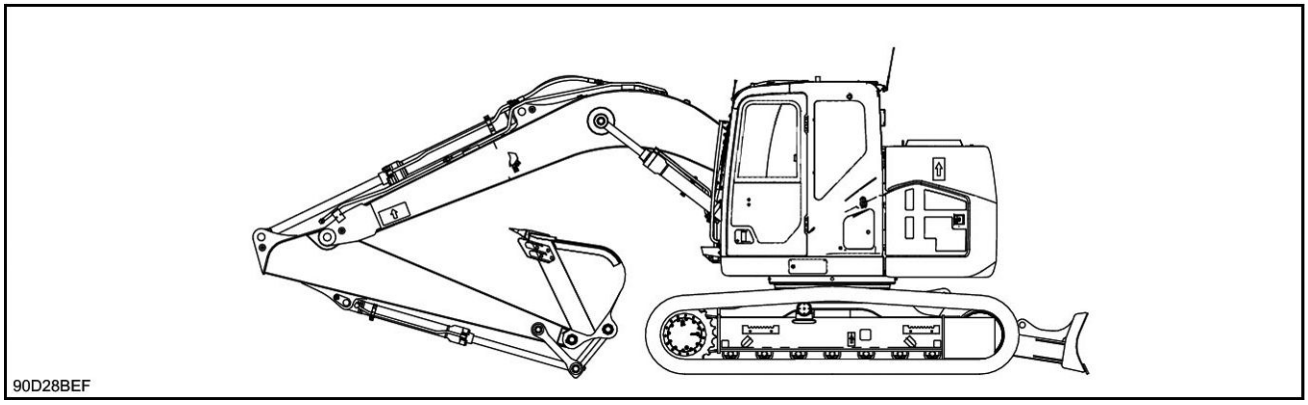

90D28BEF 1

CX145C SR (standard type with offset boom) hydraulic crawler excavator

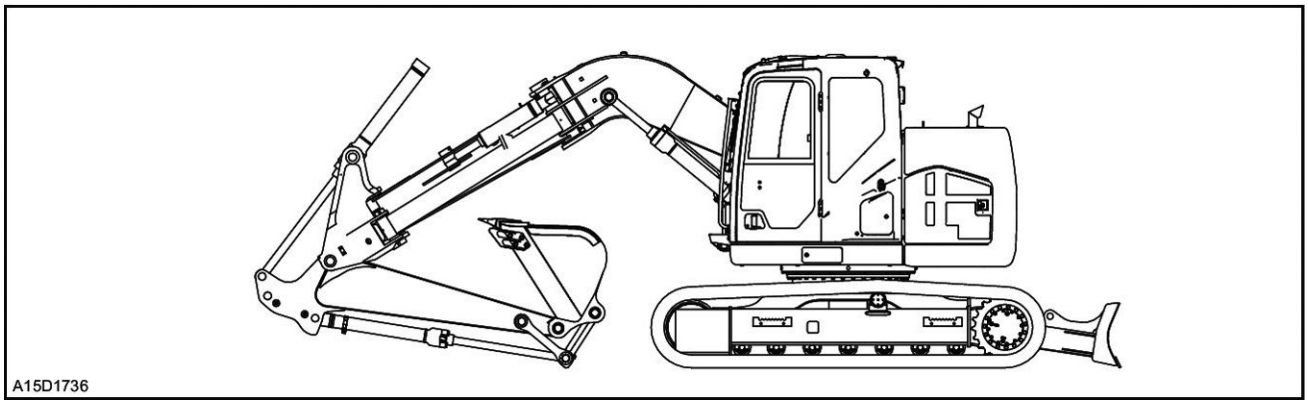

A15D1736 2

CX145C SR (LC type) hydraulic crawler excavator

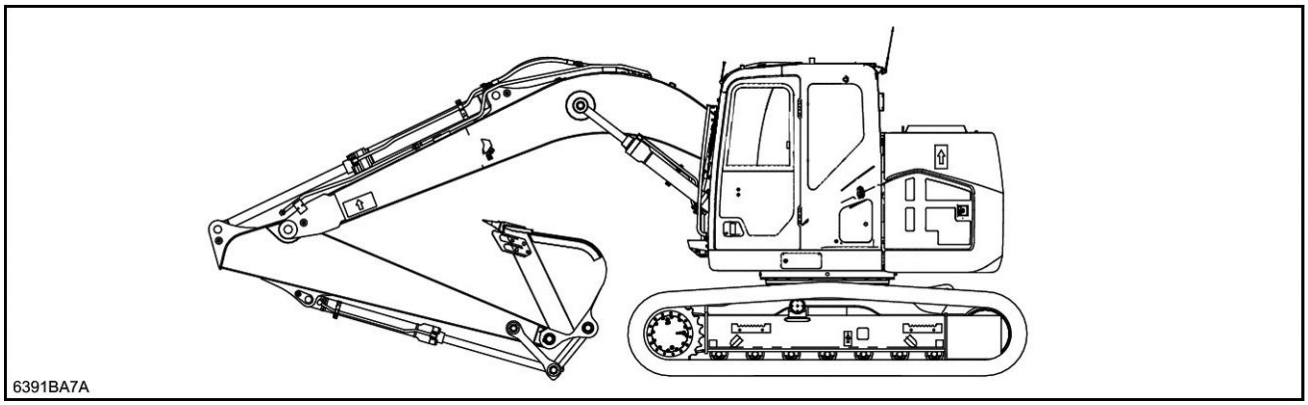

6391BA7A 3

Pin plates

When ordering parts, obtaining information or assistance, always supply your CASE CONSTRUCTION Dealer with the type and serial number of your machine or accessories.

Write the following in the spaces below: the type, serial number and year of manufacture of your machine, accessories and the serial numbers of the various hydraulic and mechanical components.

Machine

(1) Type / Model and Category:
(Hydraulic Excavator) **CX145C SR**.

(2) Product identification number:

QC3CE6-003N 4

Engine

Make and type: **ISUZU AM - 4JJ1X**

Serial number:

ATTENTION: *The engine and fuel system on your machine is designed and built to government emissions standards. Tampering by dealers, customers, operators and users is STRICTLY PROHIBITED BY LAW. Failure to comply could result in government fines, rework charges, invalid warranty, legal action and possible confiscation of the machine until rework to original condition is completed. Engine service and/or repairs must be done by a certified technician only.*

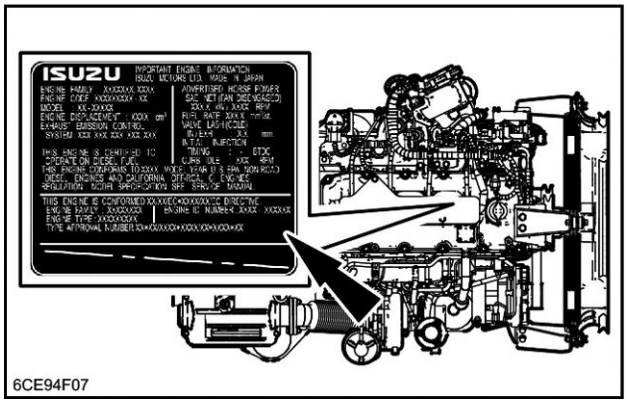

6CE94F07 5

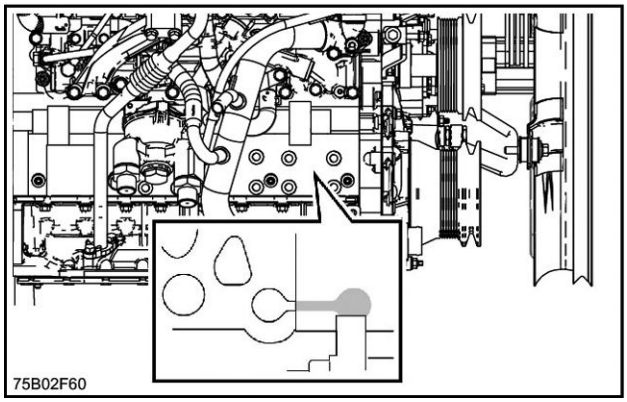

75B02F60 6

Diesel Particulate Diffuser **(DPD)**

(1) Catalyzed soot filter serial number:
Filter which has the function to purify exhaust gas with an oxidation catalyst.

(2) Diesel oxidation catalyst serial number:
Oxidation catalyst for diesel machine.

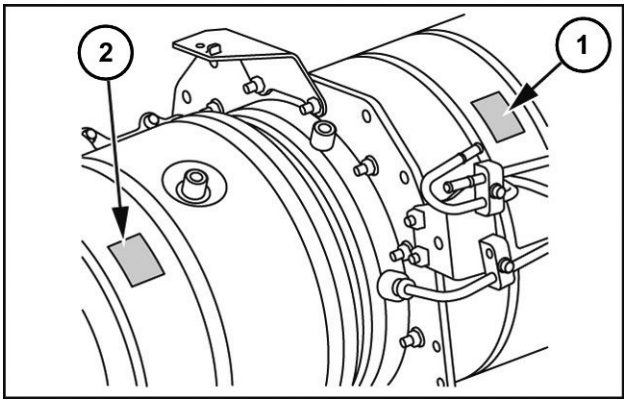

DPD00001A 7

Component serial numbers

Hydraulic pump:

Swing reduction gear:

Travel reduction gears:

Travel control valve:

Attachment control valve:

Swing control valve:

Cab protection **(FOPS)** (Falling Objects Protective Structure) (optional)

Complies with **ISO 10262** level 2 standard.

Identification number:

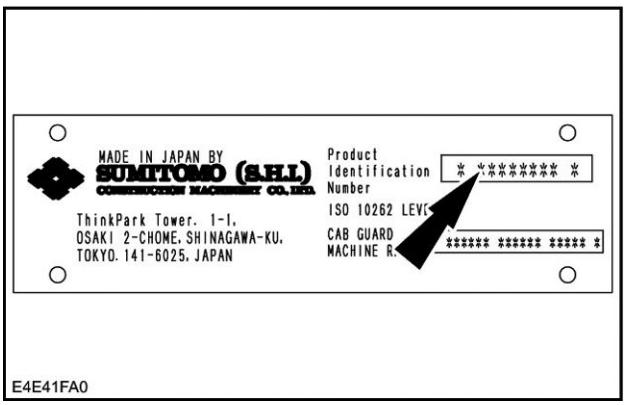

E4E41FA0 8

Structure protection **(ROPS)** (Roll Over Protective Structure)

Complies with **ISO 12117-2**

Product number:

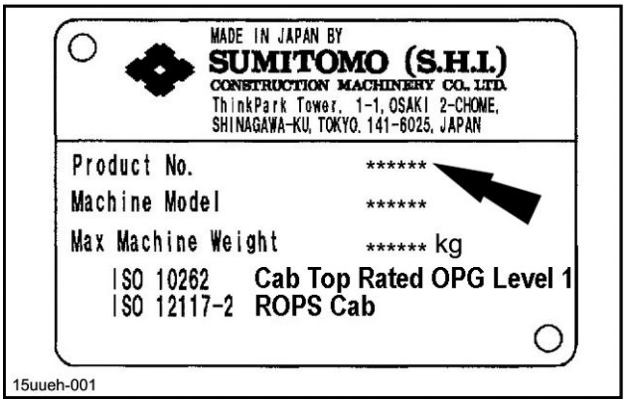

15UUEH-001 9

Quick coupler (optional)

(1) Serial number:

(2) Weight:

(3) Working pressure:

(4) Type:

(5) Part number:

(6) Date of manufacture:

(7) **SWL** (Safe Working Load):

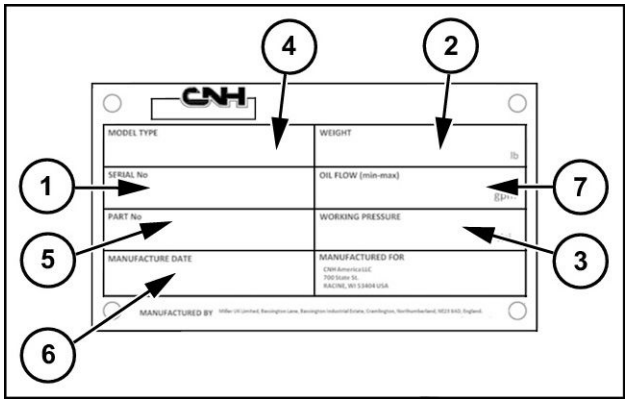

QC0001 10

Left, right, front and rear of the machine

The terms "Right-hand", "Left-hand", "Front" and "Rear" are used in this manual to indicate the sides as they are seen from the operator's seat when the cab is over the idler wheels.

ATTENTION: *The illustration opposite shows the machine in normal travel position. In normal travel position, the cab is over the idler wheels. The travel reduction gears are at the rear of the upperstructure.*

(A) Front

(B) Rear

(C) Right-hand side

(D) Left-hand side

(E) Travel motors

(F) Idler wheels

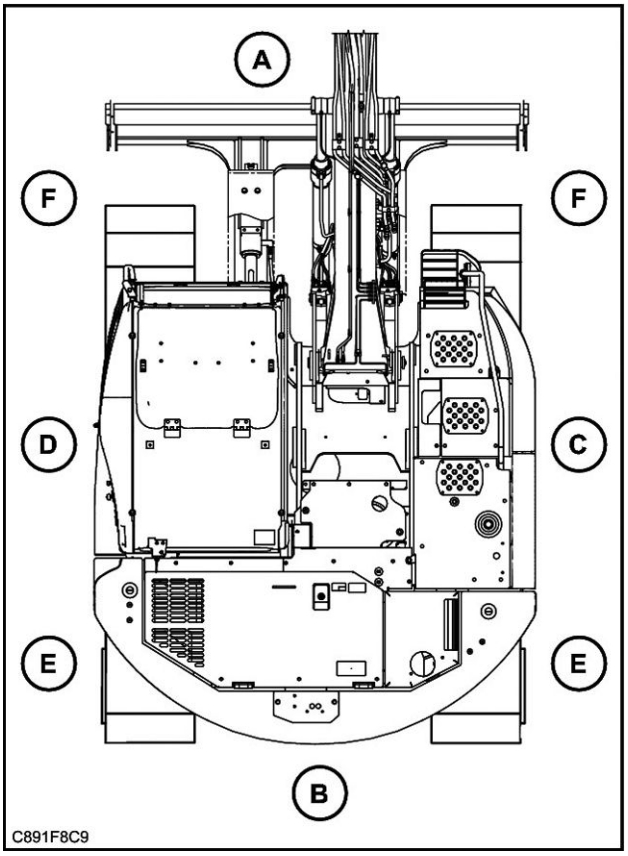

C891F8C9 1

Electro-magnetic interference (EMC)

Interference may arise as a result of add-on equipment which may not necessarily meet the required standards. As such interference can result in serious malfunction of the unit and/or create unsafe situations, you must observe the following:

- The maximum power of emission equipment (radio, telephones, etc.) must not exceed the limits imposed by the national authorities of the country where you use the machine.
- The electro-magnetic field generated by the add-on system should not exceed **24 V/m** at any time and at any location in the proximity of electronic components.
- The add-on equipment must not interfere with the functioning of the on board electronics.

Failure to comply with these rules will render the CASE CONSTRUCTION warranty null and void.

Description of the main components

The **CX145C SR** (standard type equipped with a dozer blade and in option with an offset boom) or (**LC** type) is a totally hydraulic excavator. It consists of an undercarriage fitted with tracks and a turntable bearing which supports the upperstructure frame. The upperstructure frame supports the attachment, at the front end of the machine, plus the engine, hydraulics and cab. When the operator works the controls, the engine-driven pump delivers hydraulic fluid to the control valves. The control valves distribute the hydraulic fluid to the various cylinders and hydraulic motors employed. A cooling system maintains the hydraulic fluid at normal operating temperature.

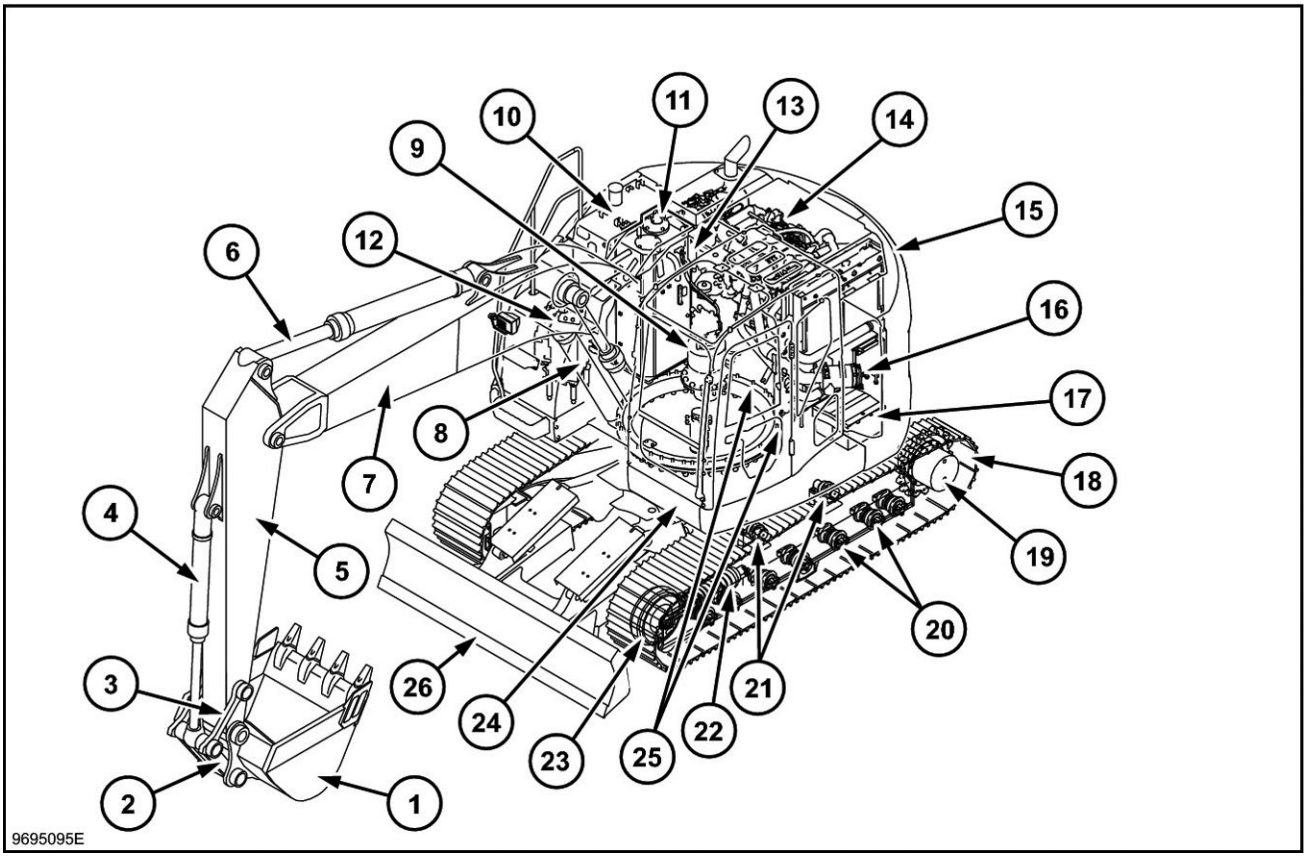

9695095E 1

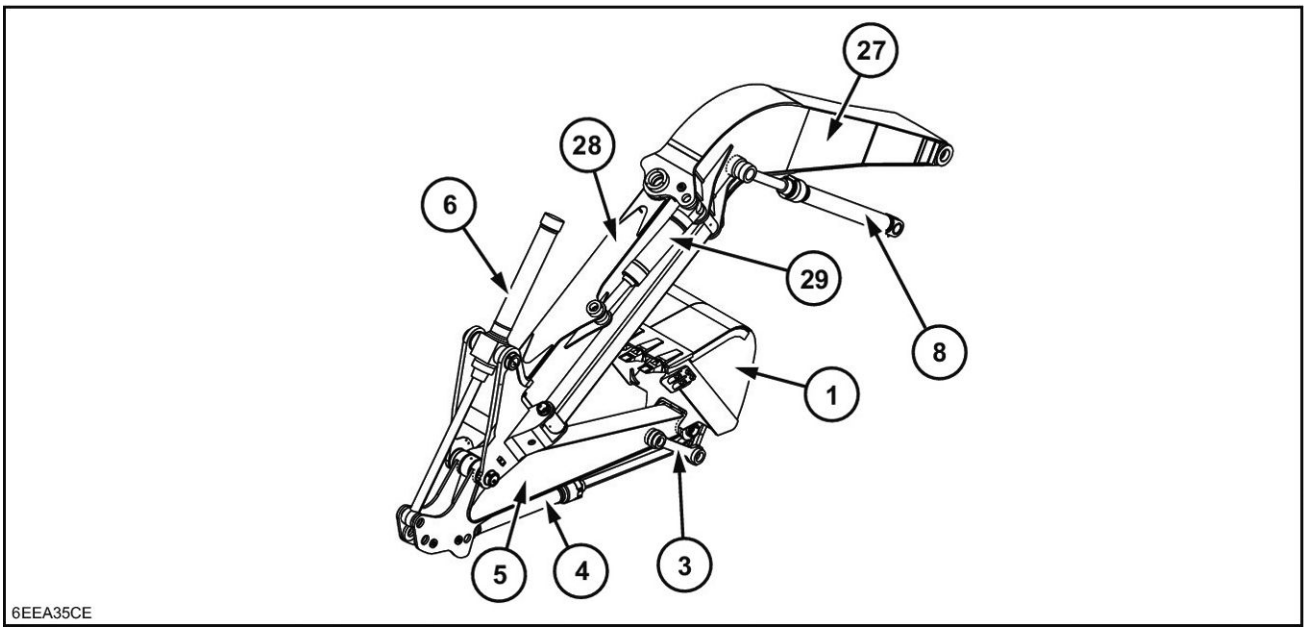

6EEA35CE 2

1. Backhoe bucket
2. Connecting rod
3. Yokes
4. Backhoe bucket cylinder
5. Arm
6. Arm cylinder
7. Boom
8. Boom cylinders
9. Swing reduction gear
10. Fuel tank
11. Hydraulic reservoir
12. Control valve
13. Hydraulic pump
14. Engine compartment
15. Counterweight
16. Air filter
17. Batteries
18. Tracks
19. Travel reduction gears
20. Lower rollers
21. Upper rollers
22. Tension shock absorbers
23. Idler wheels
24. Cab/Operator's compartment
25. Swing components
26. Dozer blade (standard machine only)
27. Fixed boom (standard machine with offset boom)
28. Moving boom (standard machine with offset boom)
29. Offset boom cylinder (standard machine with offset boom)

2 - SAFETY INFORMATION

Safety rules

Your safety and that of people around you depends on you. It is essential that you understand this manual for the correct operation, inspection, lubrication and maintenance of this machine.

Read this manual carefully and check that:

- You understand fully the symbols on the controls and the safety signs used in this manual and on the machine.
- You understand fully the speed, stability, braking and steering characteristics of the machine. If you are in any doubt, consult your CASE CONSTRUCTION Dealer.

The safety messages in this manual concern situations which may arise during normal machine operation and servicing. These safety messages also indicate the different ways of coping with these situations. Other safety messages are used throughout the manual to indicate specific dangers.

Whatever type of work is being done (earthmoving, handling, etc.), the safety measures for private or public worksites are those which conform to current regulations in the country concerned, or the type of operation concerned (for example: mining, quarrying, underground work).

The safety instructions given in this manual are a summary of the basic rules to be respected at all times and do not exempt you from insurance requirements or from abiding by the highway code.

Always keep this manual in the location provided for that purpose (behind the operator's seat). Make sure it is always complete and in good condition. If you wish to obtain extra copies, or copies in languages other than that of the country of use, consult your CASE CONSTRUCTION Dealer.

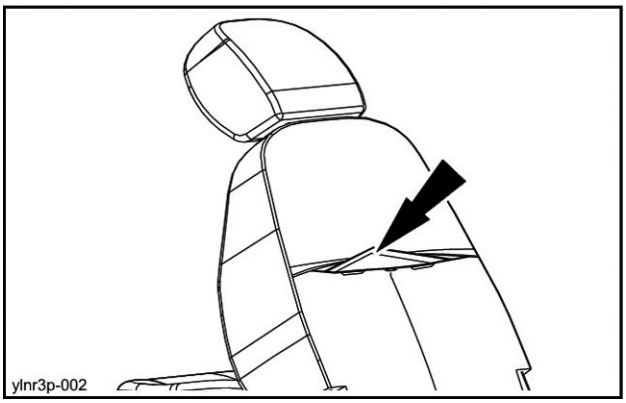

YLNR3P-002 1

Before using the machine

- Avoid loose fitting clothing, loose or uncovered long hair, jewelry or any other items which could get caught up in machinery.
- Different types of job will require different types of protective equipment. Items such as hard hats, safety shoes, heavy gloves, reflector type jackets, respirators, ear protection and eye protection may be required. Before starting a job, determine what protective equipment will be necessary. Use this equipment at all times.
- Do not attempt to operate this machine unless you have first read and perfectly understood the safety messages and instructions appearing in this manual.
- Operating the machine requires full attention and care on the part of the operator can avoid accidents. Get to know the machine's possibilities and limitations and the working space required. There are areas of poor visibility in the working range of the machine. Have someone guide you for all areas where visibility is not perfect.
- Grease, oil, mud or (in winter) ice on the steps and access handles can cause accidents. Make sure they are kept clean at all times.
- Every day, inspect the machine to detect any signs of hydraulic fluid leakage. Tighten the connections or replace any defective components as necessary.
- Remove any obstructions which hinder visibility. Keep the windshield, rear view mirror and windows clean at all times.
- Make sure the windshield wiper works correctly.
- Make sure you are perfectly familiar with hand signals in daily use on the worksite to be able to obtain help with tight maneuvers or when carrying out operations where visibility is poor.
- Before undertaking any travel or working operations during hours of darkness, make sure the lighting and signalling equipment is fully operative.
- Before any travel operation, make sure that the doors and hoods are properly latched.
- Check that no tools or other items have been left on the machine (be it on the undercarriage or the upperstructure) or in the operator's compartment.
- The operator must be alone on the machine at all times. Do not allow anyone to stand on or around the machine.
- To get in or out of the cab, it is imperative that the upperstructure frame is in line with the undercarriage.
- When alighting from or getting into the operator's compartment, always face the machine and use the steps and access handles.
- Be sure you know the position and function of each control. Incorrect operation of the controls can cause serious injuries.
- Check all controls and safety devices in a safe, open area before starting work.
- Keep away from dangerous areas such as ditches, overhangs, rocky areas, etc. Make a survey of the work-site and determine the possible dangers before using the machine.
- Before parking the machine, make sure that the ground is stable. Plan the worksite so that the ground is flat, hard and level.
- Before moving the machine to work in a new area, walk around to determine all possible causes of accidents there. Holes, obstacles, debris and other danger risks in the working area can cause serious injury.
- Be ready to meet emergencies. Always carry a first aid kit and if possible, fire extinguisher (not supplied) within easy reach on board. Make sure the fire extinguisher is regularly serviced in conformance with the manufacturer's instructions.
- Check the fastening of the main components: counterweight, turntable bearing and operator's compartment. In the event of problems, consult your CASE CONSTRUCTION Dealer.
- Make sure you understand the symbols used on the machine safety decals. Keep the decals clean so that they are perfectly legible at all times.
- Work out a means of convenient escape from the machine (emergency exit via the windshield or the rear window glass) in the event of the machine turning over or tipping over or the cab door being jammed.
- Make sure you are perfectly familiar with traffic regulations and special safety equipment requirements before transporting this machine on a public highway.
- When loading trucks, never swing the load over the truck cab.
- Before undertaking any travel on the job site, make sure the itinerary to be followed is completely safe. If bridges are to be crossed, make sure they are perfectly capable of supporting the weight of the machine.
- Always steer around large obstacles such as boulders, big trees, etc.

Quick coupler (optional)

- It is mandatory for the switch to be in the locked position when operating the machine.
- Every day, check that the locking bar functions correctly and that it is not fouled by foreign matter. Clean the locking system if necessary.
- If you are obliged to use the quick coupler with buckets not manufactured by CASE CONSTRUCTION, make sure the diameter of the pins and the width between the bucket lugs meet the dimensions needed to fit the quick coupler (pins, washers, bushings, etc.). Consult your CASE CONSTRUCTION Dealer.

Operating the machine

- When working on a public highway, use standard traffic signs and take into consideration the working range

of the upperstructure and its attachments. Local or national regulations stipulate the number, type and location of reflector strips.

- Avoid running the engine in a confined space. If there is no alternative, proper ventilation must be provided at all times.
- Do not allow anyone else on the machine. The passenger could fall or cause an accident.
- Never operate the working or travel controls unless you are properly seated in the operator's seat with the seat belt correctly fastened.
- Before starting the engine, check the direction of travel (in forward drive, the reduction gears should be to the rear of the machine).
- Do not work near overhead high-voltage electric lines without checking beforehand that all necessary measures have been taken to respect the minimum distances:
  Less than 57000 volts: **3 m** (**9.8 ft**).
  More than 57000 volts: **5 m** (**16.4 ft**).
- Study the position of any existing pipelines or conduits before starting work. Electrical cables, gas and water pipes and other underground installations can cause serious injury.
- Always make allowance for working conditions (sloping or rough ground), the site and weather conditions when driving the machine.
- Do not allow anyone to stand in the machine working area. Accidental operation of the upperstructure swing control or of an attachment control could cause an accident. Stop all operations until everyone has moved away.
- Before operating the dozer blade (if equipped) or the offset boom (if equipped) make sure that there is no one in the working area of the latter.
- Operate all controls gradually to ensure smooth machine operation.
- Whenever load handling operations are to be carried out, it is imperative to adhere strictly to the instructions given in this manual and local legislation.
- It is forbidden to use the machine to carry out tasks other than those for which it is intended. Never use the equipment for sweeping the ground to level out rubble or push objects (transversal stress on the attachment).
- Stop the engine and remove the ignition key when the machine is not in use, even for short periods of time.
- The working area of the end attachment that is mounted may interfere with the machine. Interference may be caused due to the type of end attachment or installation of parts such as a cab guard. Always maintain a safe margin of distance. (Be careful of tool swing or accidental operations.)
- To access or exit the operator's compartment, the left-hand control arm must be in the raised position. Never forget this basic requirement.
- Never leave the operator's compartment while the engine is running.
- To get in or out of the cab, it is imperative that the upperstructure frame is in line with the undercarriage.
- Dust, smoke or mist can reduce visibility and cause an accident. Reduce speed or come to a complete halt until visibility has improved.
- Never jump down from the machine. When alighting from the machine or the upperstructure, always face the machine and use the steps and access handles.
- In the event of an operating problem or failure, move the machine to a safe place, lower the attachment to the ground, shut down the engine and remove the ignition key. Locate the problem, report it if necessary and take the necessary steps to warn others not to attempt to operate the machine.
- Before tilting the seat back forward, it is mandatory to raise the armrests to avoid any accidental operation of the control levers.
- Never turn the key of the battery master switch in **"O"** (Off) position when engine is running, the electrical systems can be damage (if equipped).
- When the engine is stopped, always wait one minute minimum before to place the key of the battery master switch in **"O"** (Off) position, otherwise the computer program of the hydraulic will not exit successfully (if equipped).

Cab protection ROPS (Roll Over Protective Structure), FOPS (Falling Objects Protection Structure, optional) and front OPG (Operator Protective Guard, optional)

- Never try to weld or straighten up the protective structure.
- Do not modify the protective structure in any way. Any modification, such as welding, drilling, cutting, addition of accessories, as well as damage suffered following an impact reduces the protection that it provides. Replace the protective structure if it has suffered an impact and do not attempt to repair it.
- Incorrect inspection or service work of the protective structure may lead to serious injury. Carry out inspection operations of the protective structure given in this manual. If the protective structure or its components need to be replaced, use only those parts that are listed in the spare parts catalog corresponding to your machine.

Quick coupler(optional)

- Never place the control switch in the unlocked position when the machine is working.
- Each time a bucket is installed on the quick coupler, close the bucket and raise the attachment so as to be able to make a visual check that the bucket pin is correctly engaged in the latching hook.

- The quick coupler modifies the working range of the machine. In certain attachment positions the tool may foul the machine. Always leave a safety distance.
- Never carry out load handling using the front or rear anchoring points used to install the tool on the quick coupler.
- Never put your hands inside the quick coupler and never attempt to adjust or repair the quick coupler if the engine is running.

Parking the machine

When parking the machine, proceed as follows:

1. Position the machine on flat, level ground, away from soft ground, excavations or poorly shored cavities.
2. Place the upperstructure and the attachment in line with the undercarriage, retract the attachment and dig the bucket into the ground.
3. Lower the dozer blade (if equipped) until it rests on the ground.
4. Stop the engine and remove the ignition key.
5. You must place the function cancellation lever in raised position before leaving the operator's compartment.
6. Lock the cab door.
7. Make sure that the hoods and doors are properly latched.
8. Check that no part of the machine is encroaching on the highway. If this cannot be avoided, install the necessary regulation signalling equipment.

Maintenance and adjustments

- Do not try to service this machine unless you have first read and perfectly understood the safety messages and instructions featuring in this manual.
- When carrying out service work always wear suitable dress. Avoid loose-fitting clothing.
- Release pressure completely in the hydraulic system before disconnecting the hydraulic piping. Hydraulic oil escaping under pressure can cause serious injury.
- Before doing maintenance work on the machine, shut down the engine and allow it to cool down. Otherwise, you could be burned.
- Before commencing any work on the machine, place a "Do not operate" tag on the right-hand control arm.
- Always wear eye protection when using a tool that might project metal particles. Use a hammer with a soft face, such as copper, for installing pins.
- Badly carried out maintenance or adjustments can cause serious injuries. If you do not understand a servicing or adjustment procedure, consult your CASE CONSTRUCTION Dealer.
- If the attachment is raised or if the machine moves without an operator, serious injury can result. Before carrying out maintenance on this machine, proceed as follows:
  Park the machine on flat, level ground.
  Lower the attachment until it is resting on the ground.
  Lower the dozer blade (if equipped) until it rests on the ground.
  Stop the engine and remove the ignition key.
  Lock the tracks to prevent any machine movement.
- Any unauthorized modifications made to this machine can cause serious injury. Do not undertake any modifications without first consulting your CASE CONSTRUCTION Dealer. Any modifications made must be in conformity with the technical specifications of the machine and any current safety legislation requirements.
- Do not modify the Diesel Particulate Diffuser **(DPD)** and the exhaust system. Changing the orientation, length or diameter of the exhaust pipe would adversely affect the exhaust system's exhaust emission reduction function.
- Certain components of the machine are subject to type approval. When replacing such components, it is mandatory to make sure that they conform to regulations. For safety's sake, use genuine CASE CONSTRUCTION parts.
- Pressurized hydraulic fluid or grease which penetrates the skin can cause serious injury. Take the necessary safety precautions (safety clothing and protection for face and hands) to avoid such risks. Also, before using these products, read the manufacturer's instructions concerning their use. If hydraulic fluid penetrates the skin, call a doctor immediately.
- Coolant solution is toxic.
  Avoid contact with skin, eyes and clothing.
  Antidote:
  External: rinse thoroughly with water and remove soiled clothes.
  Internal: do not induce vomiting. Rinse the mouth out with water. Seek medical advice.
  Eyes: rinse thoroughly with water and seek medical advice.
- The pressure in the track tension cylinders is high. Follow the procedure described in this manual carefully for increasing or reducing track tension.
- When carrying out a welding operation on the undercarriage or upperstructure carriage as authorized by the manufacturer and in accordance with his instructions, disconnect the batteries, disconnect the alternator B+ and D+ terminal wires and connect the welding apparatus earth cable to the component on which the welding operation is to be performed. Never connect the welding apparatus to the undercarriage when welding on the upperstructure (or vice-versa). Never connect the welding apparatus earth to a component of the hydraulic system.
- When using compressed air, take the necessary precautions to protect your face.

- Clean the machine regularly. Accumulations of grease, dirt and debris can cause injuries or damage the machine.
- Periodically inspect the fastening of the main components, as part of the machine maintenance programme: counterweight, turntable bearing and operator's compartment. In the event of problems, consult your CASE CONSTRUCTION Dealer.
- If the accumulator is not functioning correctly, consult your CASE CONSTRUCTION Dealer. Never try to carry out any servicing operation on the accumulator. If this instruction is not followed serious injury can result.
- The accumulator is charged with nitrogen under high pressure. Do not weld or allow flames to come near to the accumulator.
- There is high pressure fuel in the feed pipe when the engine is running and immediately after it has been shut down. Wait for 2 minutes after engine shut down before you do any maintenance or inspections to allow the pressure to drop in the pipe.
- The Diesel Particulate Diffuser **(DPD)** and the exhaust gas from the exhaust system are extremely hot while the engine is running, during **DPD** regeneration and immediately after driving. Be careful not to inadvertently touch them. Otherwise, you could get burned.
- High-voltage is charged to the controller and/or to the injector while the engine is running and immediately after it has been shut down.
  Do not touch the controller or the injector.
  If it is necessary to touch them for maintenance purposes, consult your CASE CONSTRUCTION Dealer.

Quick coupler (optional)

- Every day, check that the locking bar functions correctly and that it is not fouled by foreign matter. Clean the locking system if necessary.

Preventing fires or explosions

- Engine fuel can cause an explosion or a fire.
  Never refuel when the engine is running.
  Never smoke while refuelling.
  Take all necessary safety measures when welding, grinding or working near a flame.
- When flammable materials such as plants, dry grasses and paper waste are present near the machine, they can be the cause of a fire.
- Always use a non-inflammable solvent for cleaning parts.
- A spark or a light can cause the hydrogen in a battery to explode. To avoid all risk of explosion, be sure to follow the instructions below:
  When disconnecting battery cables, always disconnect the negative cable (-) first.
  When connecting battery cables, always connect the negative cable (-) last.
  Never short-circuit the battery terminals with metal objects.
  Do not weld, grind or smoke near the batteries.
- Before performing maintenance for the electrical systems or electric welding, always place the key of the battery master switch in **"O"** (Off) position (if equipped) or disconnect the negative (-) terminal of the batteries, in order to cut off the electric circuit.
- Always store batteries in a safe place, out of the reach of children.
- Sparks can fly from the electrical system or the engine exhaust. Before running the machine in an area where there may be inflammable gasses, make sure there is adequate ventilation.
- If possible, make sure there is a fire extinguisher (not supplied) within easy reach on board the machine. Make sure the fire extinguisher is regularly serviced in conformity with the manufacturer's instructions.
- Clean the machine regularly, removing all debris and inflammable material.
- Make sure there are no leaks and replace any damaged hoses, lines or connectors. After any repair work, clean the machine before operating.

Prevention of burns

- The electrolyte in the batteries can cause serious burns. The battery contains sulphuric acid. Avoid contact with skin, eyes and clothing.
  Antidote:
  External: rinse thoroughly with water and remove soiled clothes.
  Internal: do not induce vomiting. Rinse the mouth out with water. Seek medical advice.
  Eyes: rinse thoroughly with water for 15 minutes and seek medical advice.
- When battery electrolyte freezes it can explode if you try to charge the battery or start up the engine with a booster battery. To prevent the electrolyte from freezing, always keep the battery fully charged.
- The battery produces explosive gases. Keep all naked flames, sparks and cigarettes away. Ensure adequate ventilation when charging batteries or when using in a confined place. Always protect your eyes when working near the battery.
- Boiling coolant solution can spray out if the radiator cap is removed while the system is still hot. Before removing the cap, let the system cool down and then turn the cap to its first notch, waiting until all pressure is released. Then remove the cap.
- Never touch battery terminals with the hands as electrolysis can take place within the human body and damage vital organs.

Using an implement other than a bucket

- When using a special implement (hydraulic breaker, cutter crusher etc.), refer to the operator's manual provided with the implement.

Safety area

The safety area is the space necessary for the machine to operate at the maximum range of the tool and at full swing **360 °** plus **2 m**.

(1) Working area.

(2) Safety area.

Implement operation and maintenance

- For the implement operation and maintenance, refer to the operator's manual provided with the implement.

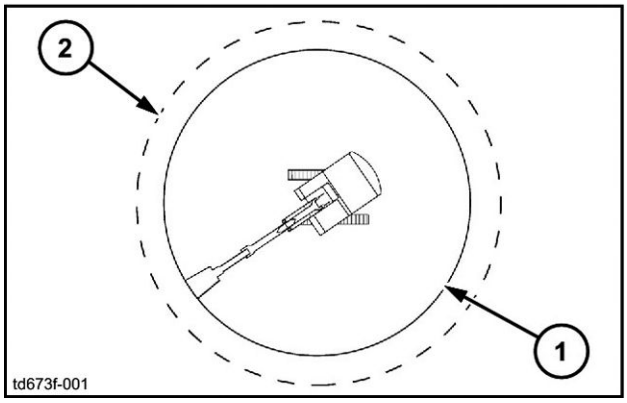

TD673F-001 2

Utility safety

Safety precautions must be followed when working near buried utility lines.

During operation it is likely that you will be working around or near buried utility lines which may include, but are not limited to:

- Electrical Power Line
- Gas Line
- Water Line
- Communication Line - Telephone or Cable Television

ATTENTION: *Before beginning any trenching, or other construction work it is your responsibility to be aware of all such utility lines buried in the area of your project and to avoid them.*

Always have all local utility companies mark the location of their lines.

In U.S.A. and Canada call one of many One Call System Directory services. If you do not know the local number, call the national number (U.S.A. and Canada only): 1-888-258-0808.

Check with local authorities for laws, regulations and/or strict penalties requiring you to locate and avoid existing utilities.

ATTENTION: *Call all local utility companies before you perform any machine operation.*

Know the utility color code (U.S.A. and Canada):

Electric : Red
Gas, Oil, or Petroleum : Yellow
Communication, Telephone, Television : Orange
Water : Blue
Sewer : Green/Brown
Proposed Excavation : White
Surveying : Pink
Reclaimed Water and Slurry : Purple

After locating the utility lines, carefully dig a hole by hand and/or automatic vacuum equipment to the utility line to verify the location and depth of the line.

Safety decals

⚠ WARNING

Avoid injury!
An illegible or missing decal can have far-reaching consequences. Inspect decals daily.
Failure to comply could result in death or serious injury.

W0228A

⚠ WARNING

Avoid injury!
Make sure decals are perfectly legible. Clean decals regularly. Replace all damaged, missing, painted over, or illegible decals. See your dealer for replacement decals. When replacing parts bearing decals, be sure to put new decals on each new part.
Failure to comply could result in death or serious injury.

W0229A

The following safety decals are placed on your machine as a guide for your safety and for those working with you. Walk around the machine and note the content and location of these safety decals before operating your machine.

Keep safety decals clean and legible. Clean safety decals with a soft cloth, water, and a gentle detergent. Do not use solvent, gasoline, or other harsh chemicals. Solvents, gasoline, and other harsh chemicals may damage or remove safety decals.

Replace all safety decals that are damaged, missing, painted over, or illegible. If a safety decal is on a part that is replaced, make sure the safety decal is installed on the new part. See your CASE CONSTRUCTION Dealer for replacement safety decals.

Safety decals that display the “Read Operator’s Manual” symbol are intended to direct the operator to the operator’s manual for further information regarding maintenance, adjustments, or procedures for particular areas of the machine. When a safety decal displays this symbol, refer to the appropriate page of the operator’s manual.

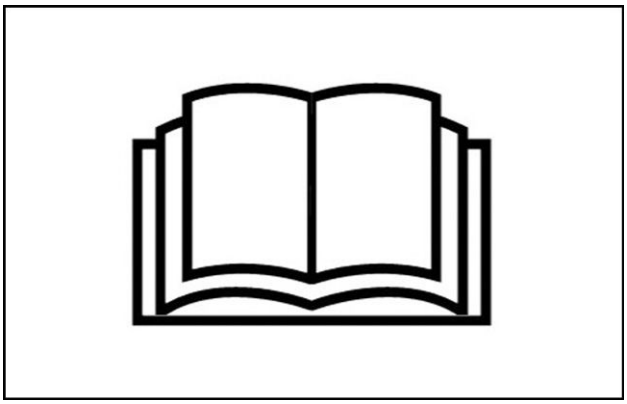

OM0000 1

NOTE: *This chapter only covers decals relating to safety and machine operation and servicing. For information on all decals on the machine, consult the spare parts catalogue.*

Position of decals

When replacing a decal, make sure it is located as shown below.

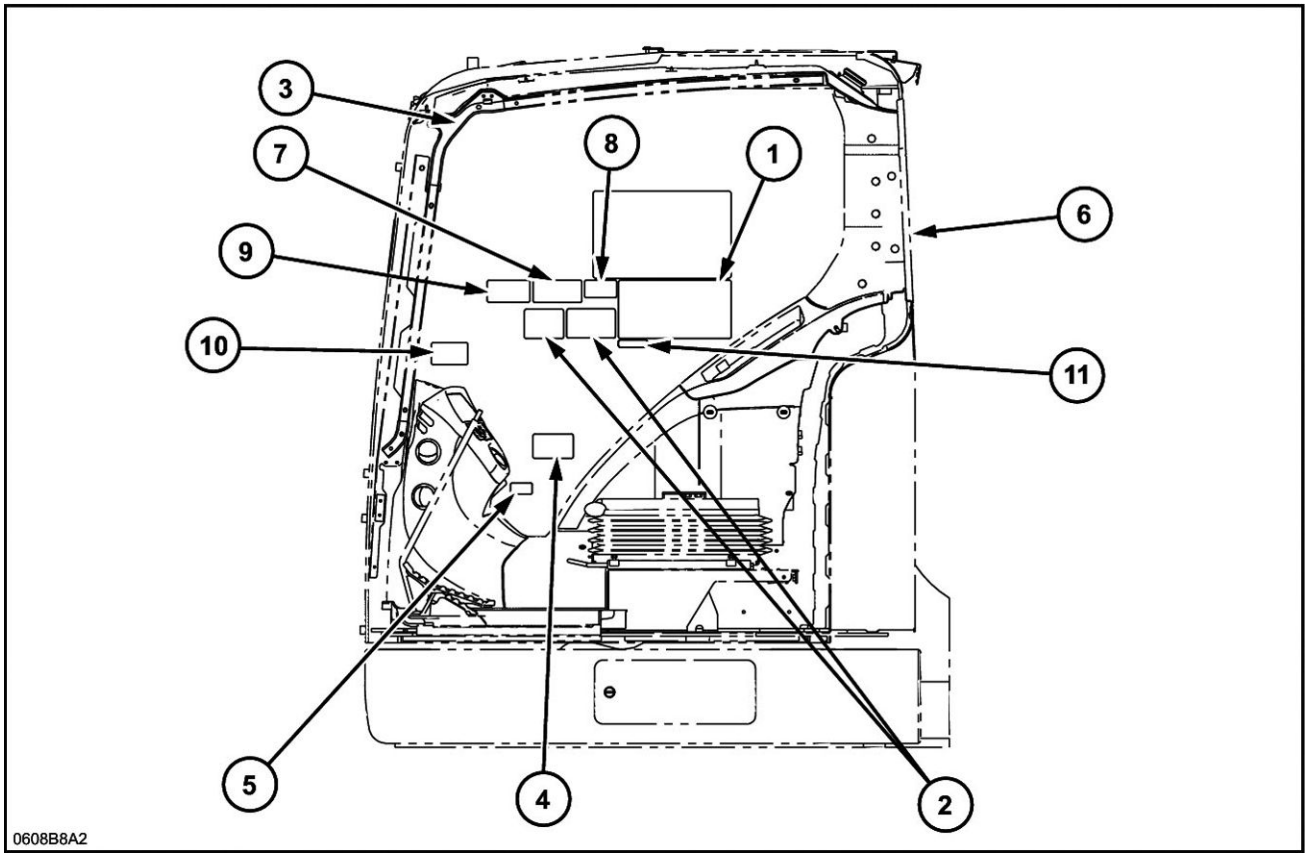

0608B8A2 2

See chapter “Illustration of decals” for the functions of decals.

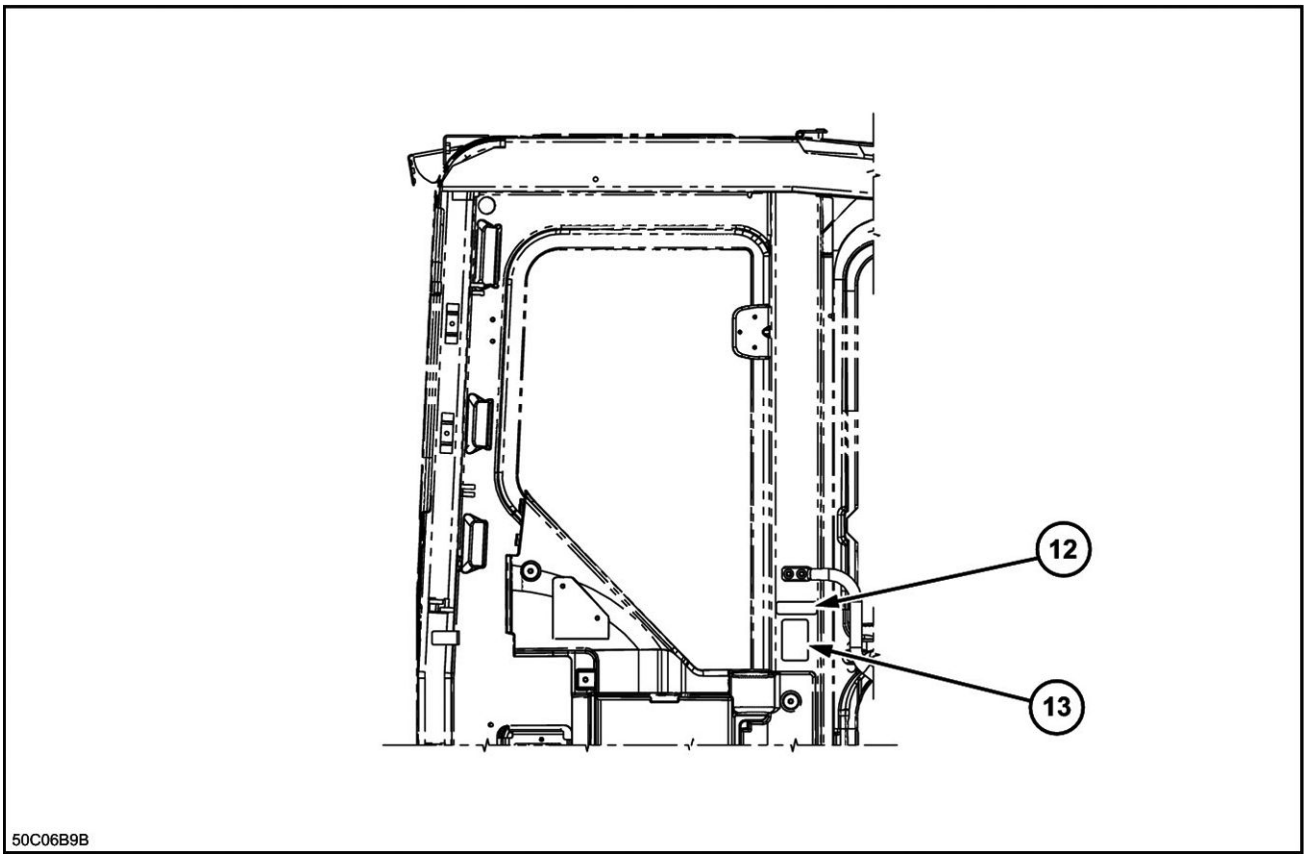

50C06B9B 3

See chapter “Illustration of decals” for the functions of decals.

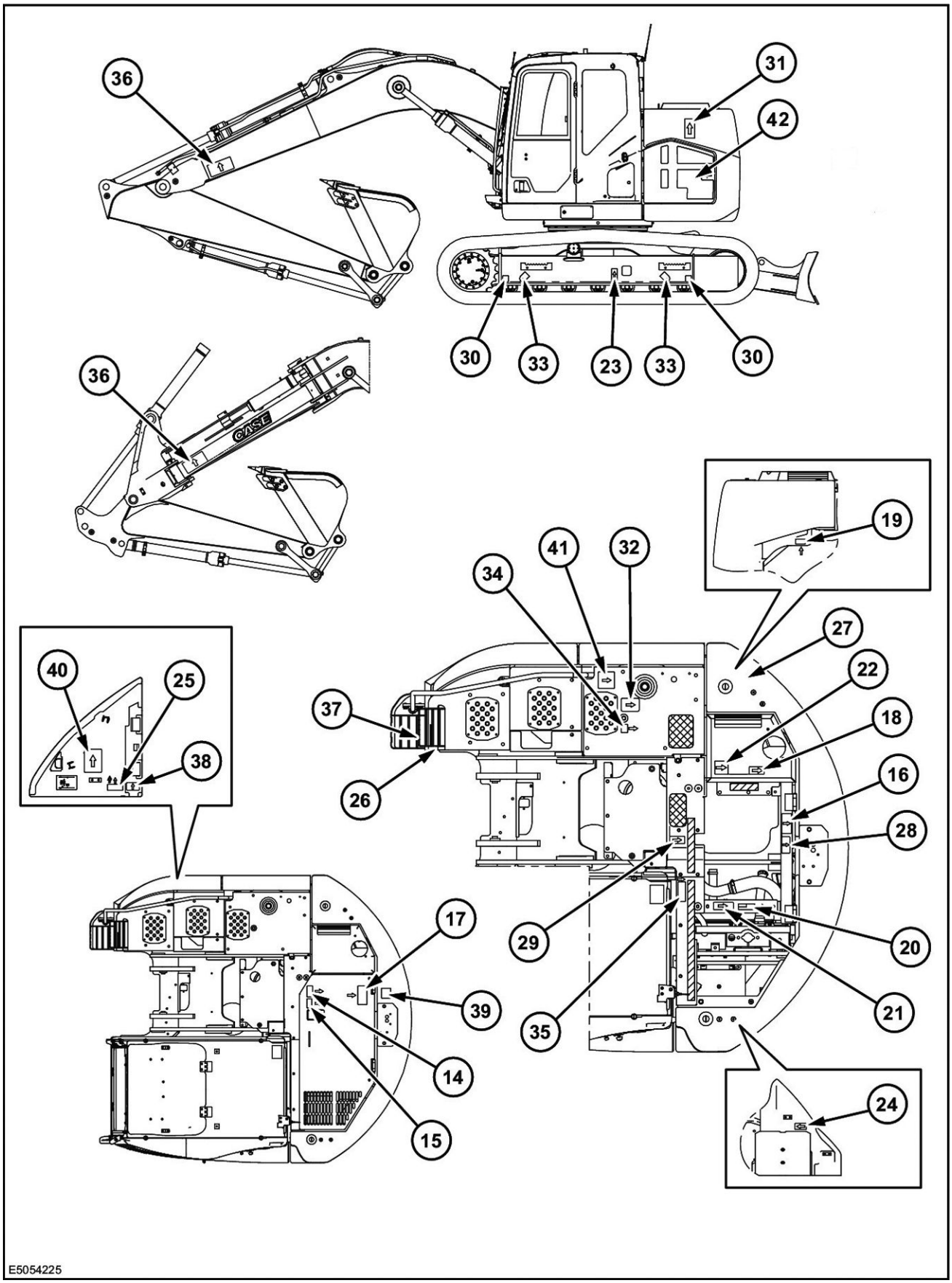

E5054225_TU 4

Illustration of decals

Table of safety precautions

Part number: KHP19130

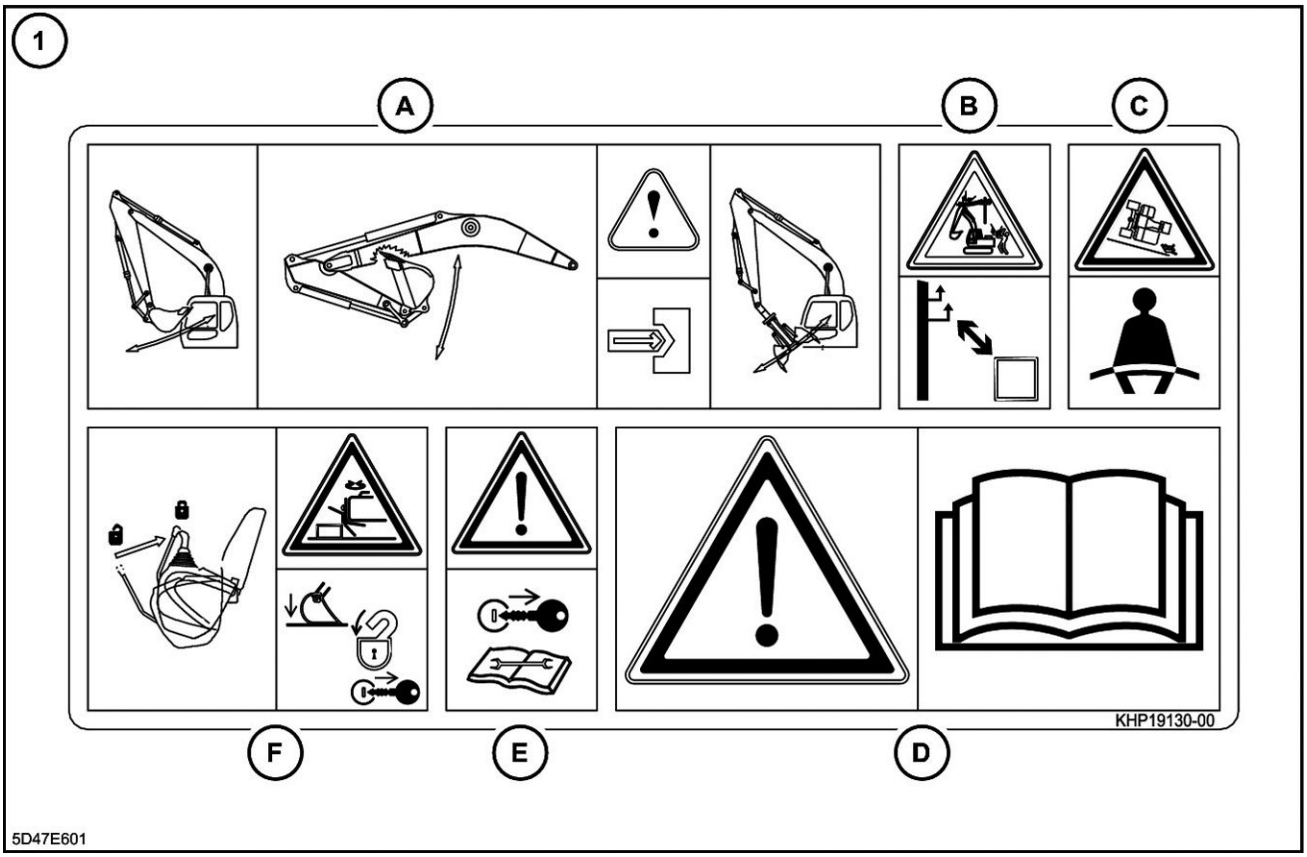

5D47E601 5

Tool interference

This decal draws attention to the fact that, in certain positions, there can be interference of the tool between the attachment and the operator's compartment. Always observe a minimum safety distance between the tool and the operator's compartment (in case of swinging or accidental movements).

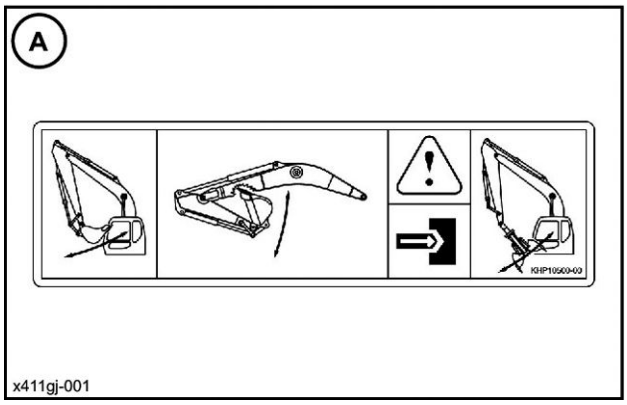

X411GJ-001 6

Danger electric line

This decal shows that work near overhead high-voltage electric lines must not be done without checking beforehand that all necessary measures have been taken to respect the minimum distances.

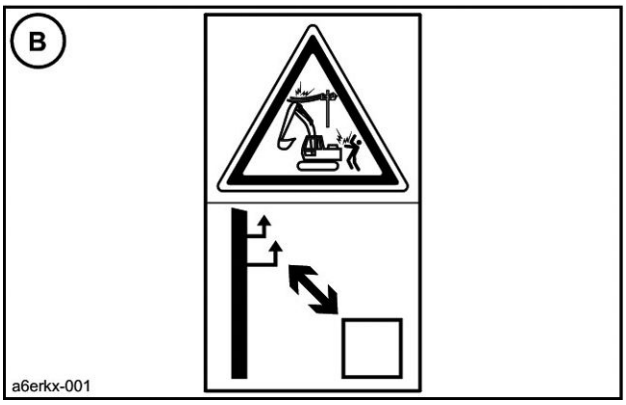

A6ERKX-001 7

Seat belt

This decal shows that the seat belt must always be fastened so that you don't get ejected if the machine turns over.

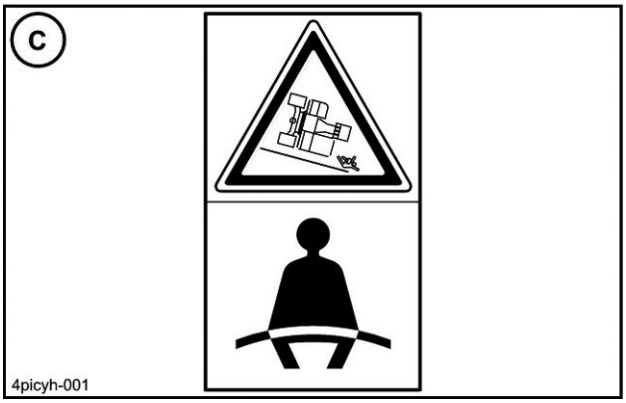

4PICYH-001 8

Operator’s manual

This decal shows that you must read the operator’s manual before using the machine.

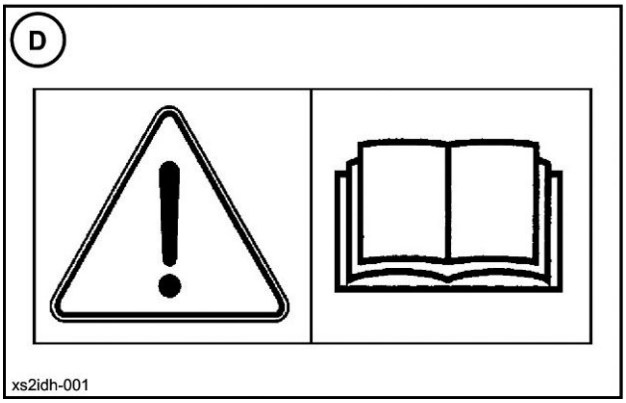

XS2IDH-001 9

Maintenance or inspection

This decal shows that the engine must be stopped and the ignition key removed during maintenance or inspection of the machine.

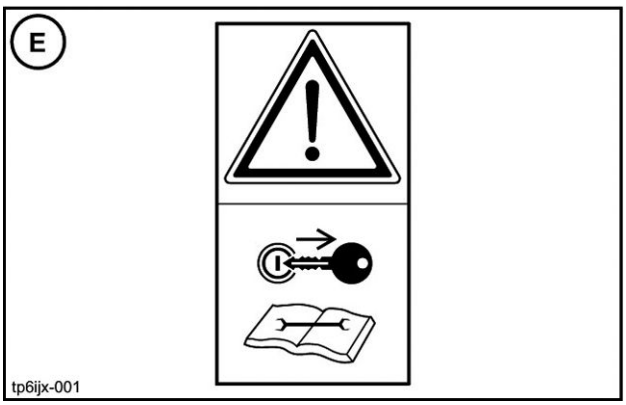

TP6IJX-001 10

Parking the machine

This decal shows that, before leaving the operator's compartment, the bucket and the dozer blade (if equipped) must be lowered to the ground, the function cancellation lever must be in raised position, the engine stopped and the ignition key removed in order to prevent any movement of the machine.

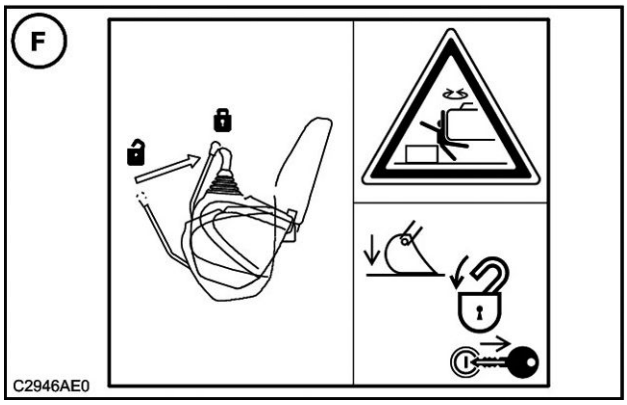

C2946AE0 11

Function of the control levers

Part number: KHP17380

This decal shows the function of the left-hand and right-hand control levers.

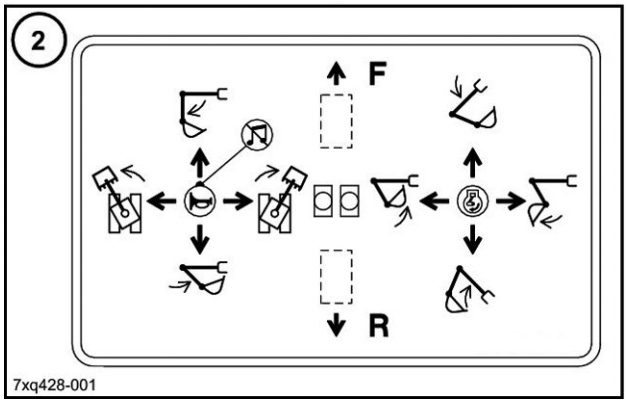

7XQ428-001 12

Control pattern card (if equipped)

Part number: KHP17380

This card is placed on one side or the other, according to selected configuration type of the control levers, in the pocket provided in the cab, See "Control pattern selection" decal

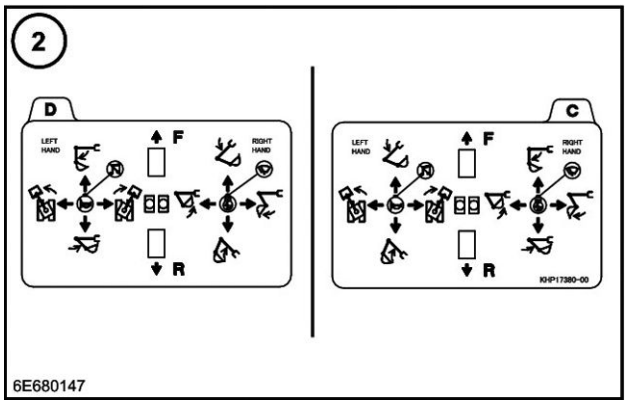

6E680147 13

Auxiliary control function (if equipped)

These decals show the different functions for the auxiliary control.

For low and/or high flow.
Part number: KHP11730

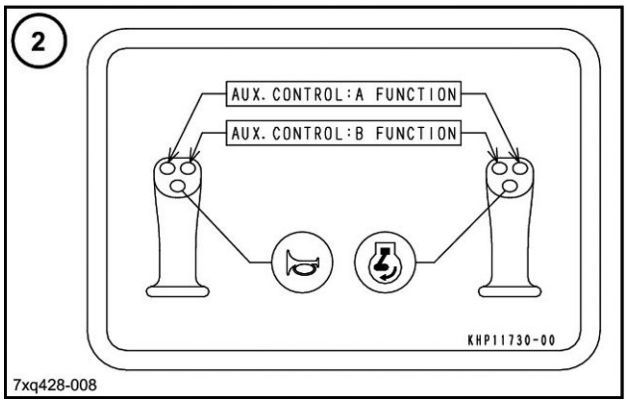

7XQ428-008 14

For hydraulic breaker and/or high flow (with right-hand option).
Part number: KHP1941

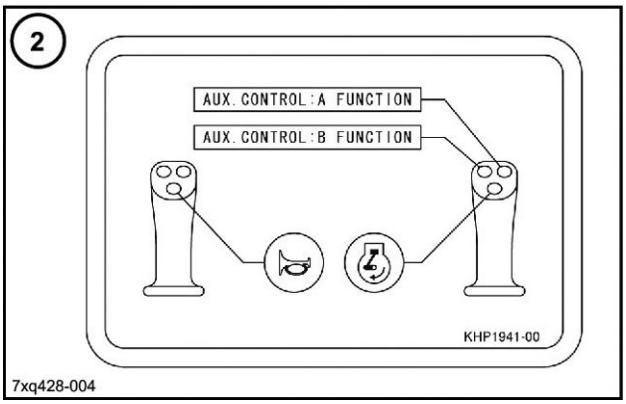

7XQ428-004 15

For hydraulic breaker and/or high flow (with left-hand option).
Part number: KHP11720

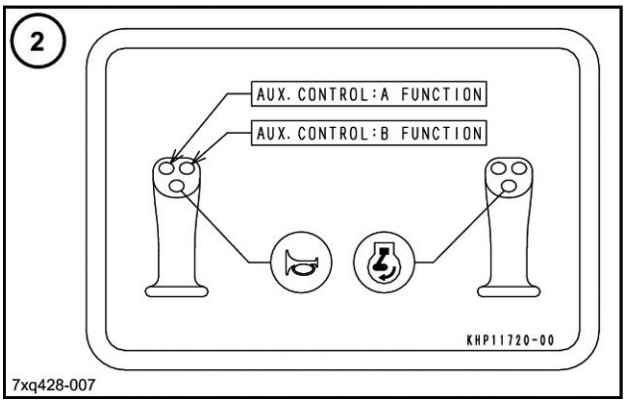

7XQ428-007 16

Function of the control levers

Part number:
KHP17380
KHP21120 (With right-hand option),
KHP21150 (with left-hand option),
KHP21160 (with right and left-hand option).

This decal shows the function of the left-hand and right-hand control levers.

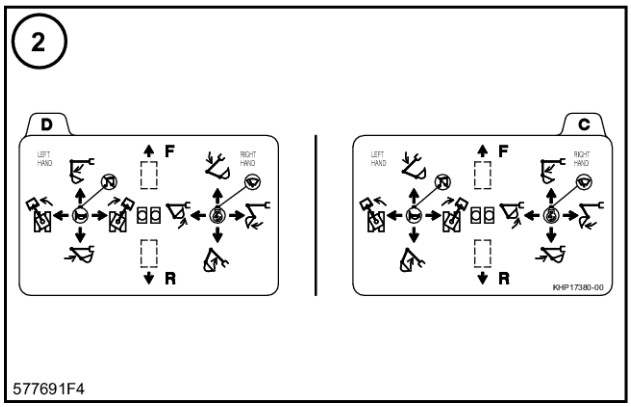

577691F4 17

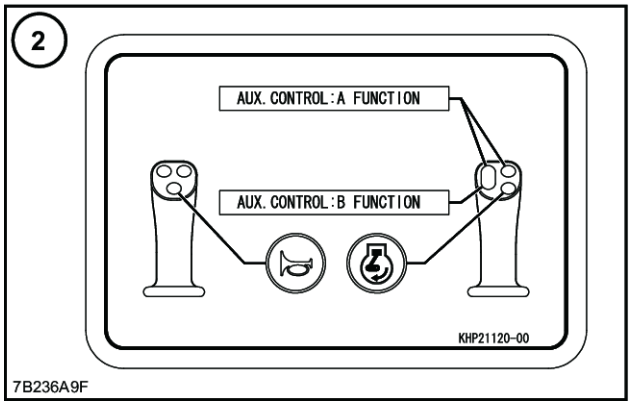

7B236A9F 18

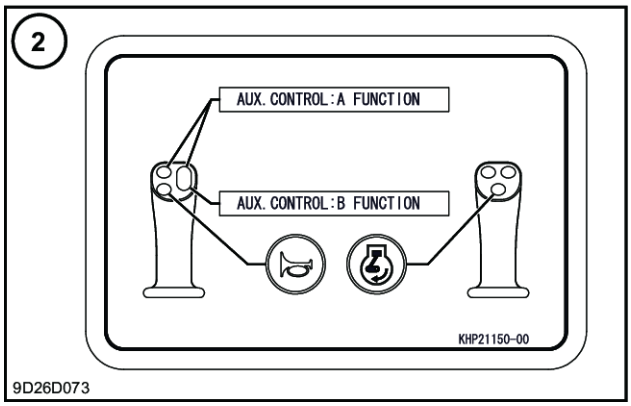

9D26D073 19

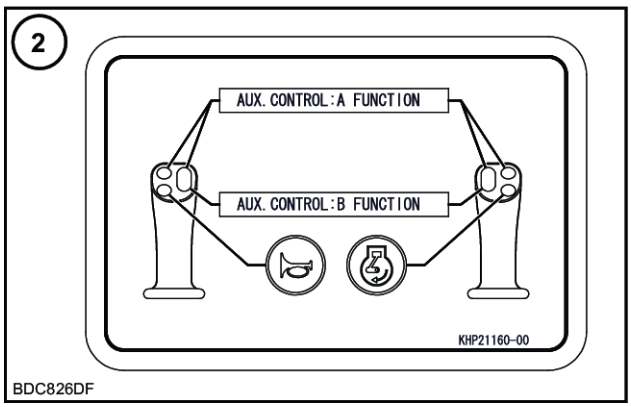

BDC826DF 20

Windshield locking

Part number: KHP12540

This decal shows that the windshield must be correctly locked in open position, in order to prevent it from tipping.

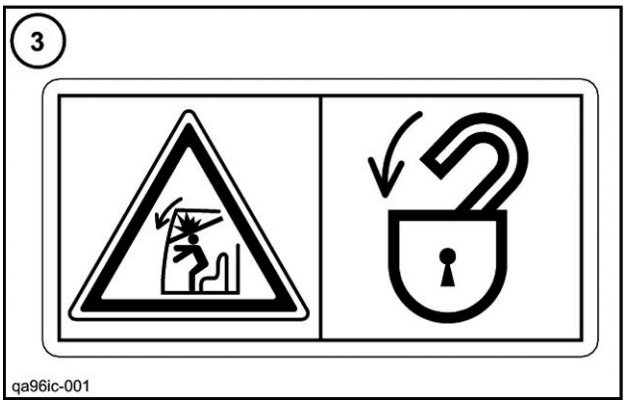

QA96IC-001 21

Function of the levers and pedals

Part number:
KHP1498 (standard)
KHP1484 (with right-hand option)
KHP1510 (with left-hand option)
KHP1511 (with right and left-hand options)
KHP1572 (with dozer blade if equipped)
KHP1573 (with option and dozer blade if equipped)
KHP20950 (with offset boom if equipped)
KHP20960 (with option and offset boom if equipped)

This decal shows the function of the travel control levers and pedals.

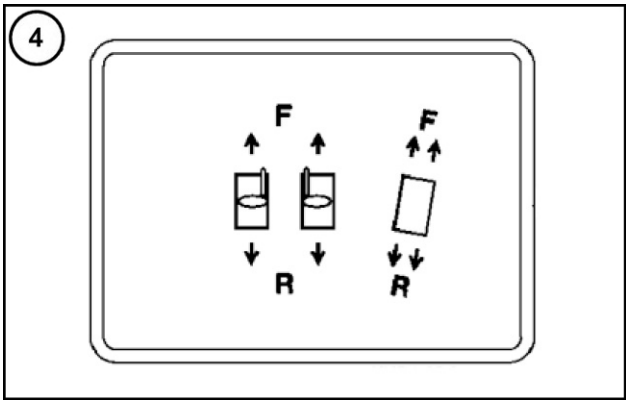

KHP1486 22

Cigarette lighter socket (24 volts)

Part number: KHP11590

This decal shows the location and the voltage of the cigarette lighter socket. It is strictly prohibited to connect devices of a different voltage.

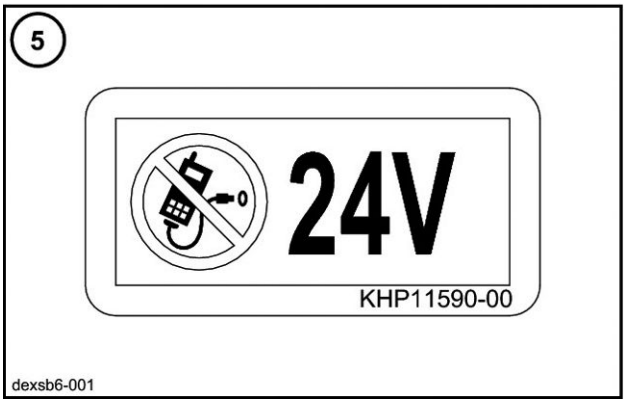

DEXSB6-001 23

Emergency exit

Part number: KHP1247

This decal shows the location and way how to use the emergency exit (rear window).

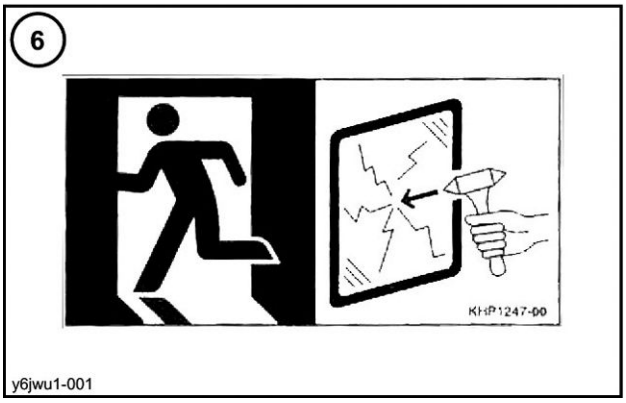

Y6JWU1-001 24

Control pattern selector (if equipped)

Part number: KHP18200

This machine is equipped with a control pattern selector. Do not operate unless control pattern card in this holder matches selector valve position. See “Control pattern cards” decal **(2)**.

NZU4ZU-002 25

Diesel Particulate Diffuser **(DPD)**

Part number: KHP18140

This decal shows that you must read the operator’s manual before using the Diesel Particulate Diffuser system.

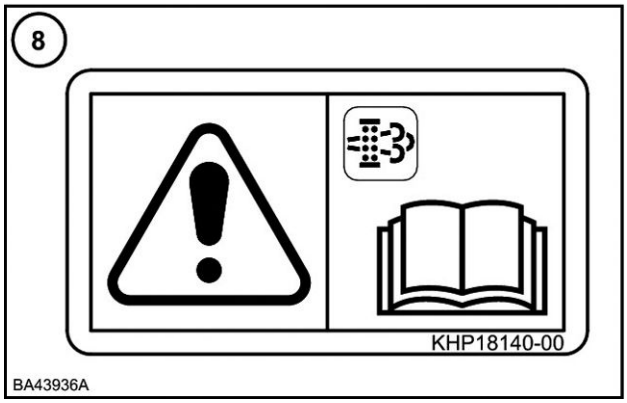

BA43936A 26

Free swing

Part number: KHP18370

This decal indicates that it is necessary to read the operators manual when the free swing is used.

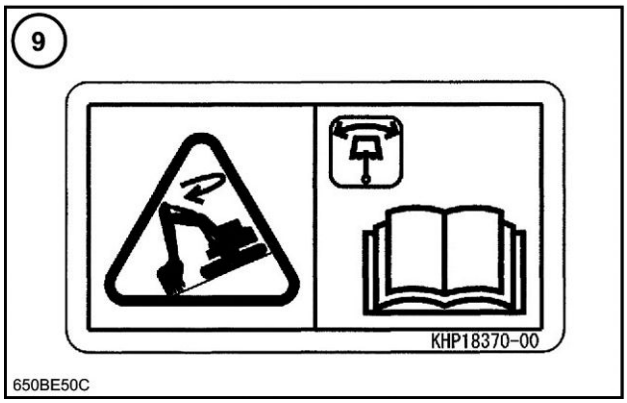

650BE50C 27

Dozer blade interference (standard machine only)

Part number: KHP1384

This decal draws attention to the fact that, in certain positions, there can be interference between the boom and the dozer blade. Always observe a minimum safety distance between the boom and the dozer blade (accidental movements).

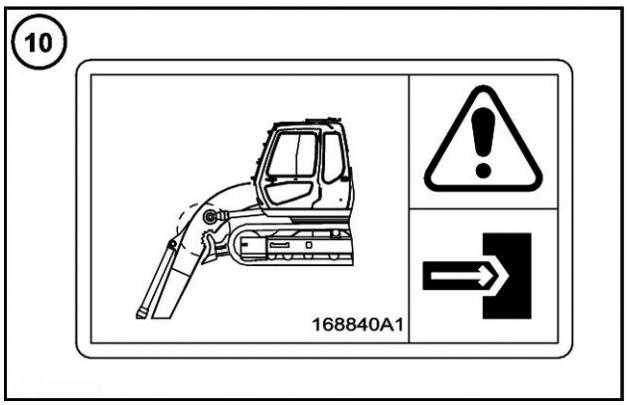

7C37A1FD 28

Dozer blade operation (standard machine only)

Part number: KAP0859

This decal shows the dozer blade operation.

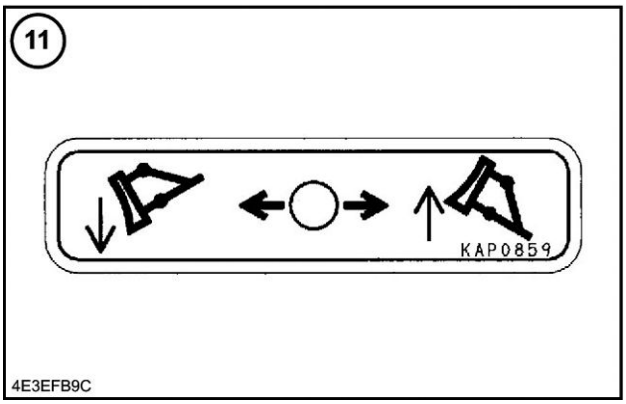

4E3EFB9C 29

Customer assistance

Part number: KHP18650

This decal indicates the telephone number for assistance.

9FD61F7D 30

Cab protection **FOPS** (Falling Objects Protective Structure, optional) and **ROPS** (Roll Over Protective Structure)

Part number: KHP18640

This decal indicates that it is prohibited to weld, drill and cut the cab protection.

CC3A17F2 31

Engine hood

Part number: KHP1335

This decal warns that it is essential to stop the engine before opening the hood.

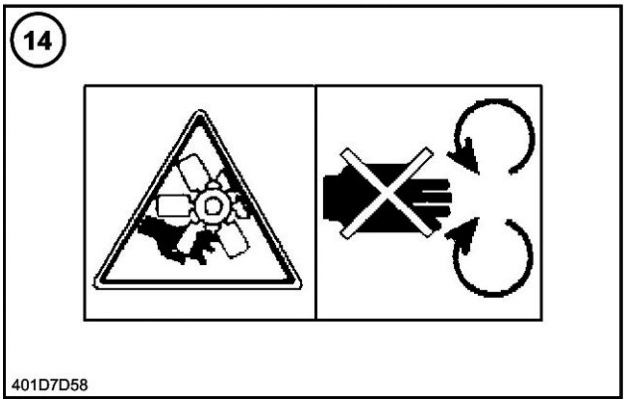

401D7D58 32

Engine hood

Part number: KHP12230

This decal shows that it is prohibited to climb onto the engine hood (risk of falling).

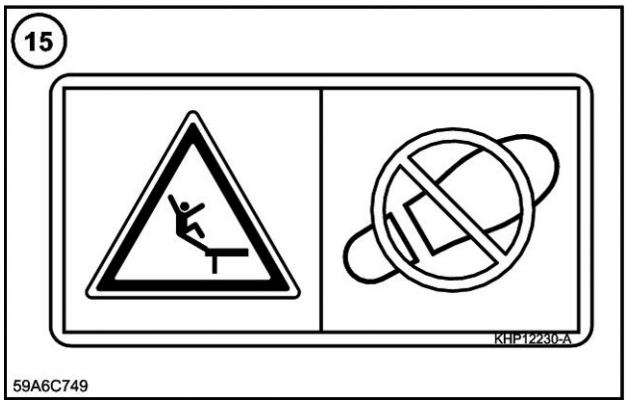

59A6C749 33

Starting the engine

Part number: KHP1336

This decal warns that it is forbidden to start the engine by any other means than with the ignition key.

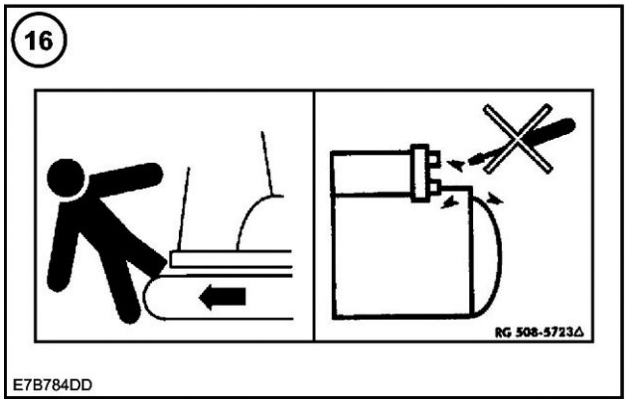

E7B784DD 34

Risk of falling

Part number: KHP12220

This decal shows that a safety distance must be maintained during movements on the upperstructure frame.

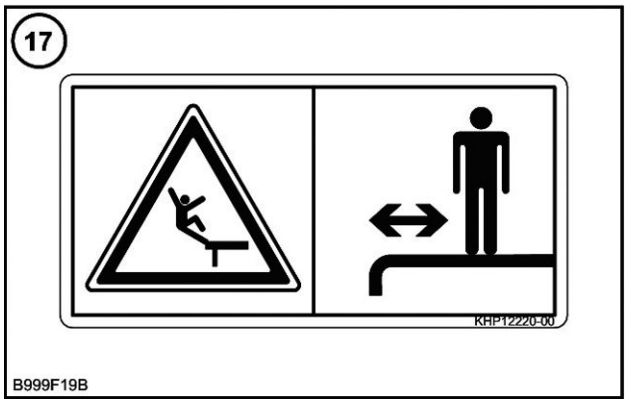

B999F19B 35

Exhaust

Part number: KHP1338

This decal warns that one must never touch the silencer when it is still hot.

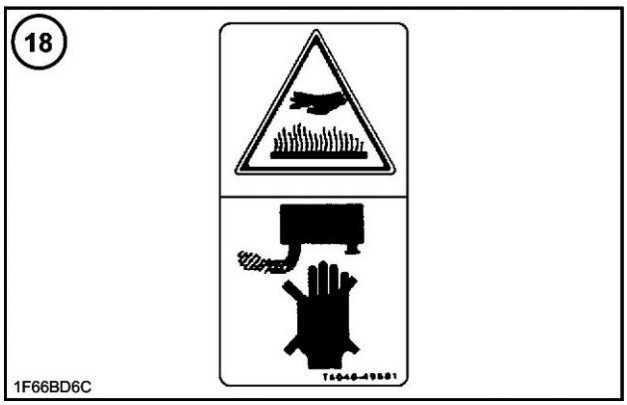

1F66BD6C 36

Exhaust

Part number: KHP17410

This decal warns that one must never touch the silencer when it is still hot.

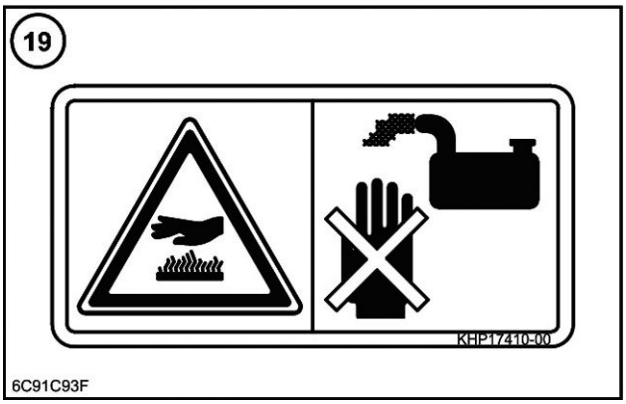

6C91C93F 37

Radiator

Part number: KHP1326

This decal warns that the radiator must never be touched and that the radiator cap must never be removed while the cooling system is still hot. Wait for the system to cool down before carrying out any operation.

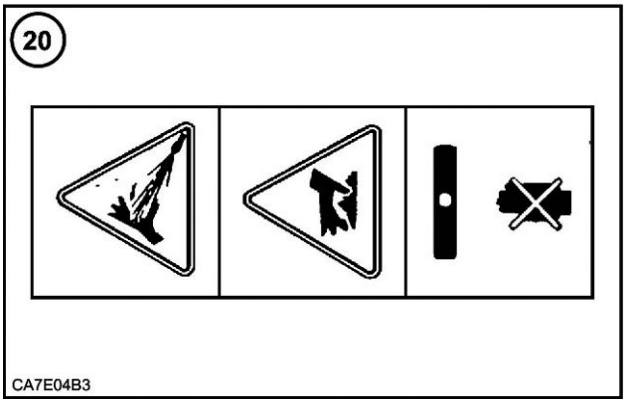

CA7E04B3 38

Fan belt

Part number: KHP1337

This decal warns that the fan and the fan belt must never be touched while the engine is running. Stop the engine before performing any operation.

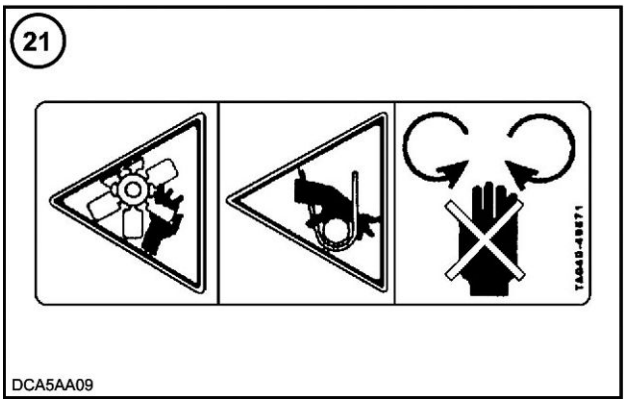

DCA5AA09 39

Intercooler

Part number: KHP18130

This decal warns the operator not to touch the high temperature cooler. Do not attempt to step on.

50B42AF0 40

Check valve

Part number: KHP17390

This decal indicates that if the check valve of the recoil spring is loosened, the valve may fly out. It indicates that check valve loosening must be performed correctly after reading the operator's manual.

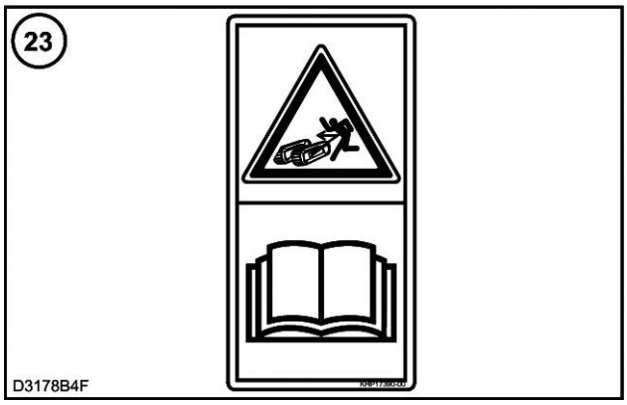

D3178B4F 41

Batteries

Part number: KHP17430

This decal shows that it is necessary to consult the operator’s manual before handling the batteries.

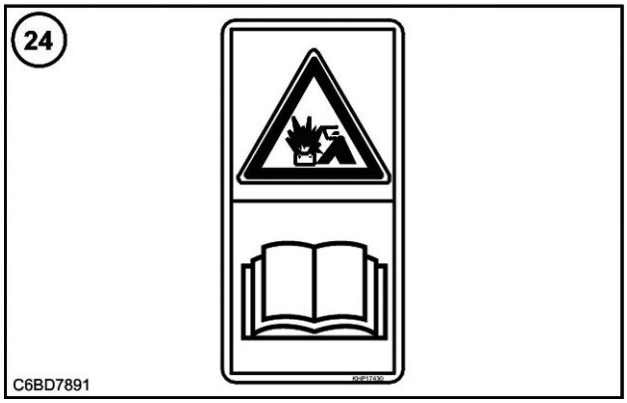

C6BD7891 42

Fuel filter replacement

Part number: KHP15770

This decal indicates that fuel filter replacement must be performed correctly after reading the operator's manual.

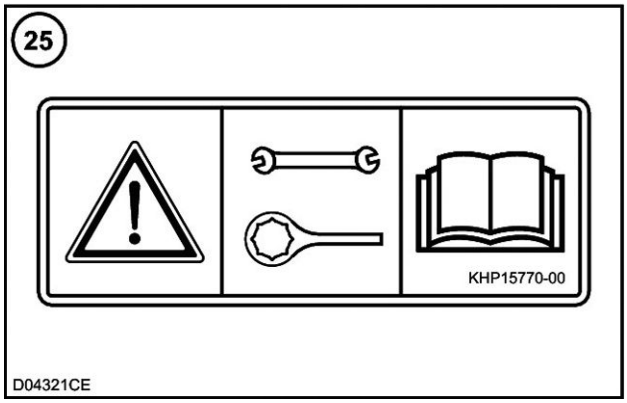

D04321CE 43

Servicing table

Part number: KMP12391 (**LC** type)
Part number: KMP12401 (standard machine type)
Part number: KMP12920 (standard machine type with offset boom)

This decal shows the servicing points and intervals.

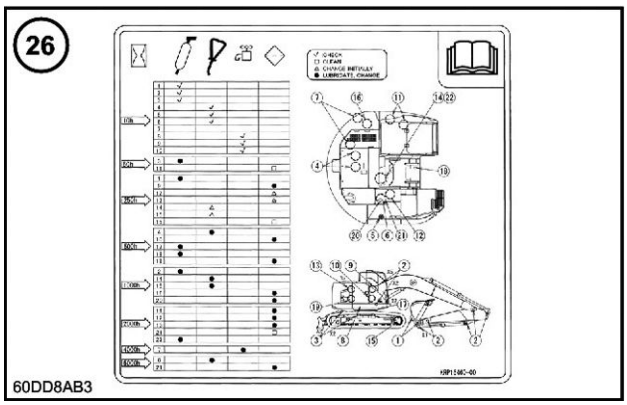

60DD8AB3 44

Accumulator

This decal warns that the accumulator is filled with gas under high pressure and that one must not bring a flame or weld close to the accumulator. For any service work, consult your CASE CONSTRUCTION Dealer.

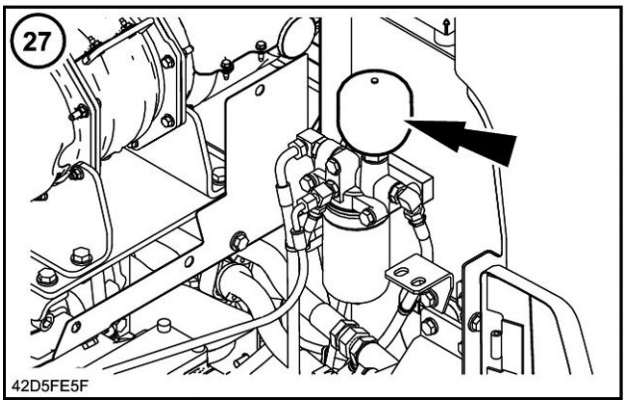

42D5FE5F 45

High pressure common rail

Part number: KHP13160

This decal indicates that the high-pressure valve of the common rail must not be loosened, because the engine fuel system is highly pressurized. It indicates that high-pressure fuel may spray out dangerously.

275A6D39 46

Engine operation

Part number: KHP17440

This decal warns the operator not to step on the engine. It indicates that engine maintenance must be performed correctly after reading the operator's manual.

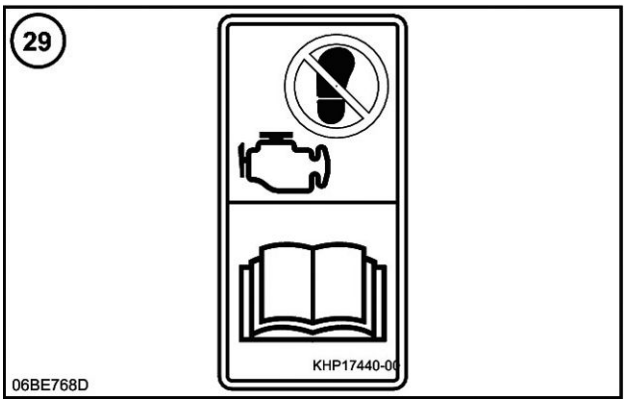

06BE768D 47

Tie down point

Part number: KHP15200

This decal shows the tie-down points for transporting the machine.

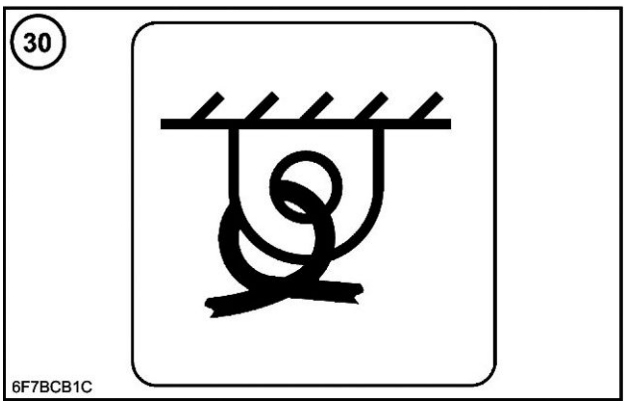

6F7BCB1C 48

It is forbidden to stand within the working range of the upperstructure

Part number: KHP17510

This decal reminds the operator not to allow anyone to stand within the working range of the upperstructure while the engine is running (risk of being crushed).

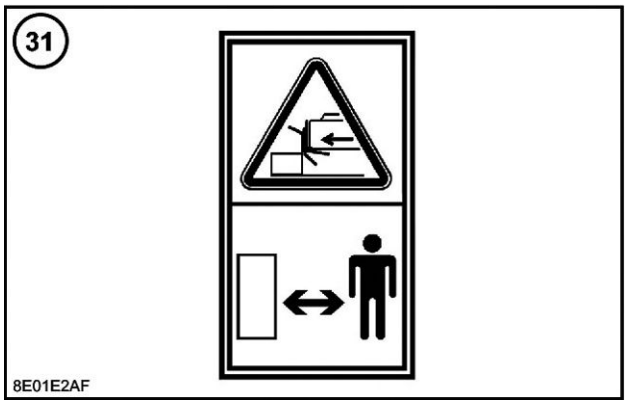

8E01E2AF 49

Low sulfur fuel

Part number: KHP18120

This decal indicates that it is necessary to use only ultra low sulfur fuel and refer to operator's manual.

A054864D 50

Slinging points

Part number: KHP19380

This decal shows where to attach slings when handling the excavator. Never use any other slinging points apart from those designated by this decal.

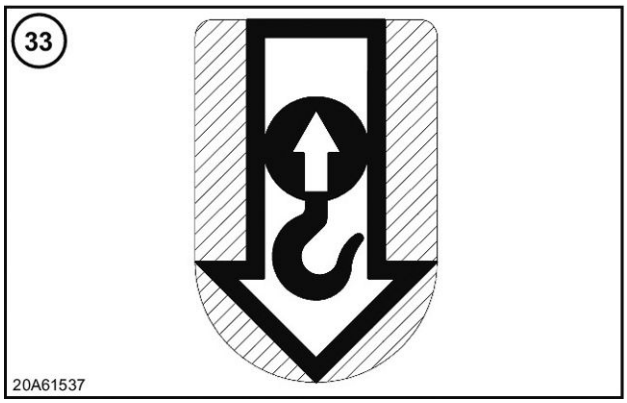

20A61537 51

Hydraulic reservoir

Part number: KHP1330

This decal shows the location of the hydraulic reservoir.

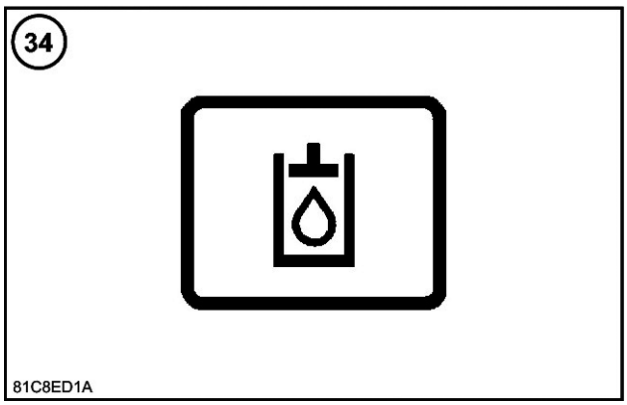

81C8ED1A 52

Engine oil for Diesel Particulate Diffuser **(DPD)**

Part number: KHP17980

This decal shows it is absolutely never use another type of engine oil as this can cause damage to the engine and Diesel Particulate Diffuser **(DPD)**, use the specified engine oil. Please be aware that trouble resulting from use of another type of engine oil is not covered by the warranty.

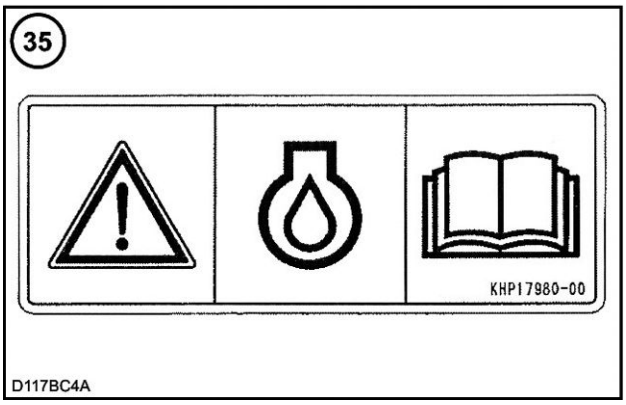

D117BC4A 53

It is forbidden to stand within the working range of the attachment

Part number: KHP1388

This decal reminds the operator not to allow anyone to stand within the working range of the attachment while the engine is running (risk of being crushed).

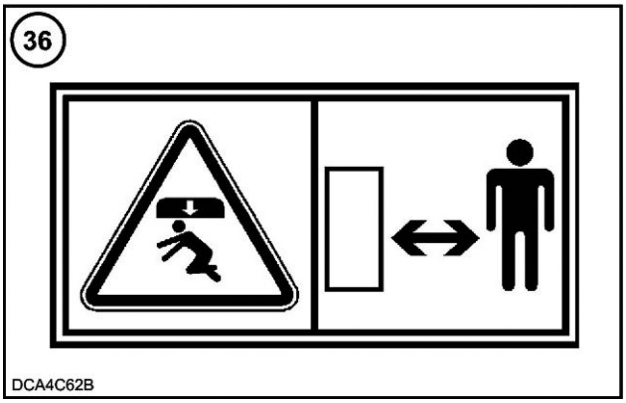

DCA4C62B 54

Danger electric line

Part number: KHP18060

This decal shows that work near overhead high-voltage electric lines must not be done without checking beforehand that all necessary measures have been taken to respect the minimum distances.

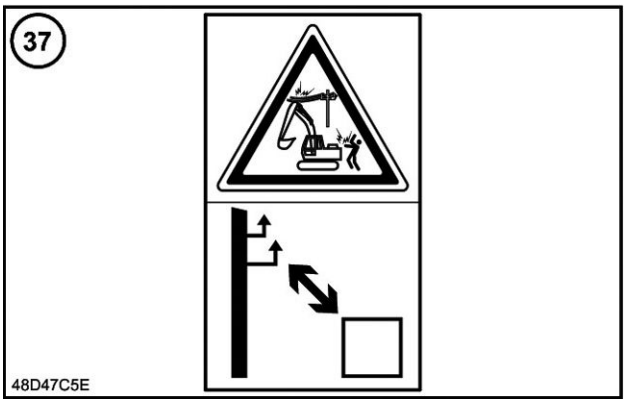

48D47C5E 55

Precautions to be taken for air bleeding of the fuel line

Part number: KHP20110

This decal indicates that when bleeding air out of the fuel line, switch the valve. Read the operator's manual for instructions.

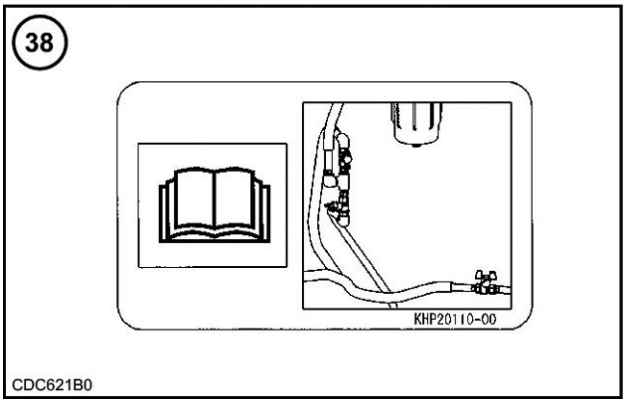

CDC621B0 56

Camera electrical harness disconnection

Part number: KHP18460

This decal shows that before removing the counterweight, it is necessary to disconnect the rear camera electrical harness and read the operators manual.

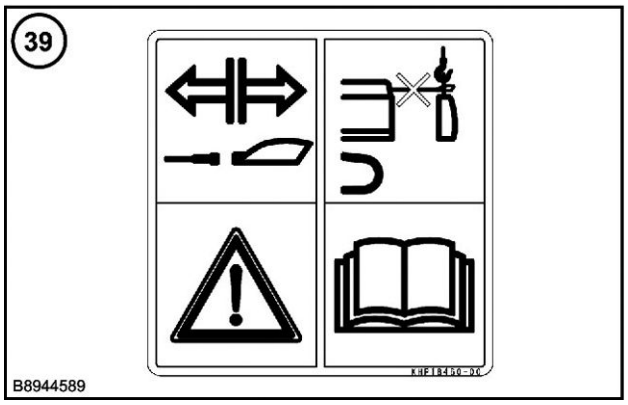

B8944589 57

Control pattern selection (if equipped)

Part number: KHP12300

This decal shows the two different types of configuration of the control levers and the instructions to be observed.

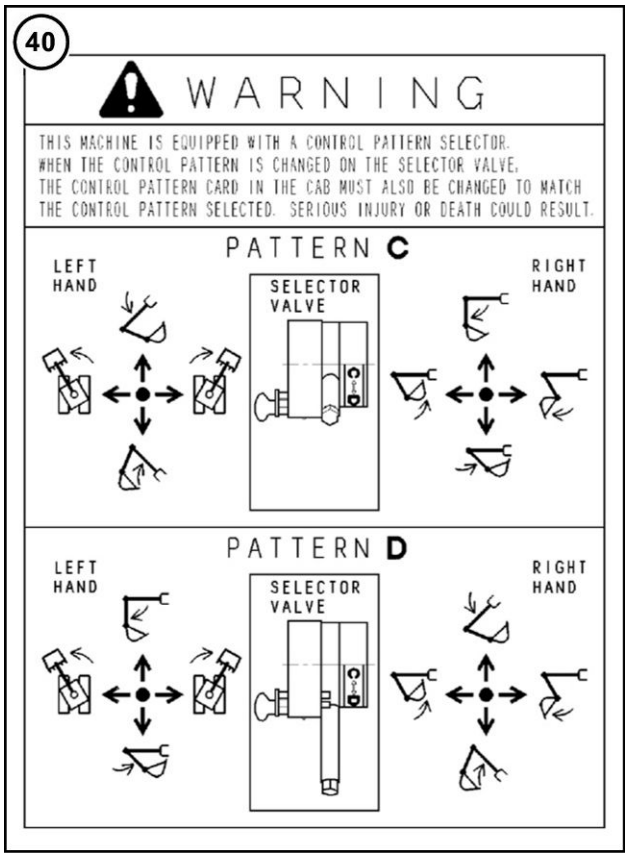

73D70B68 58

Control pattern selector (if equipped)

Part number: KHP1757

This decal shows the position in which the selector must be placed according to the selected configuration type of the control levers. See “Control pattern selection” decal.

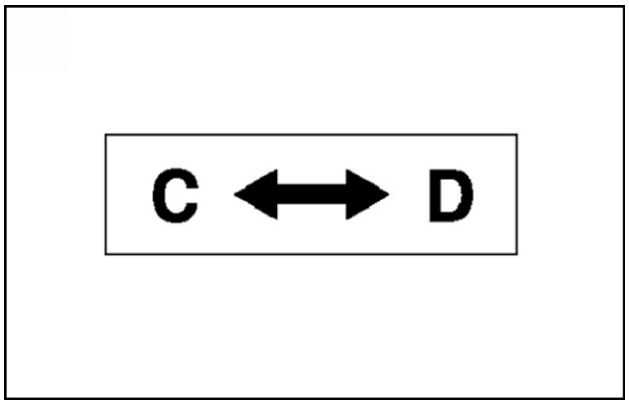

KHP1757-00B 59

Fuel tank

Part number: KHP17840

This decal shows the location of the fuel tank and that suitable fuel must be used.

EFC5F8C2B 60

Quick coupler (optional)

This decal shows the precautions to be taken to ensure that the implement is correctly installed on the quick coupler.

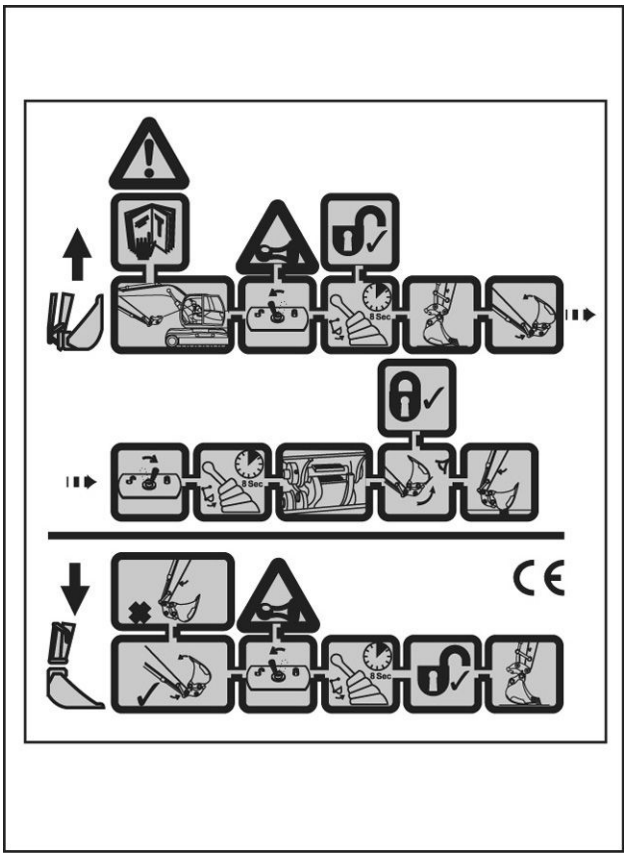

COUPL-001 61

Battery Disconnect Switch

Part number: **KHP22050**

This decal indicates that battery disconnect switch must be disconnected after reading the operator's manual.

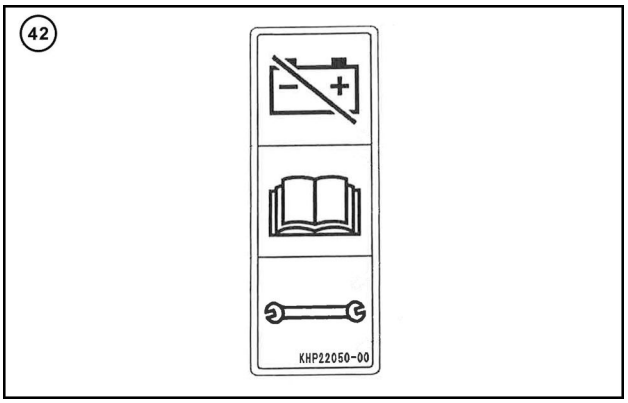

B2013_TU145_NA 62

Hand signals

When operating the machine, never attempt to carry out tasks calling for fine control or working in areas where visibility is poor or impaired without seeking the assistance of a signalman. Make perfectly sure that you and the signalman understand the signals to be used.

The following is a compilation of the Hand Signals to be used when a flagman is required for Excavator Operation. All personnel associated with the operation of the excavator should know these signals and their meaning before attempting to operate this machine.

Raise load vertically

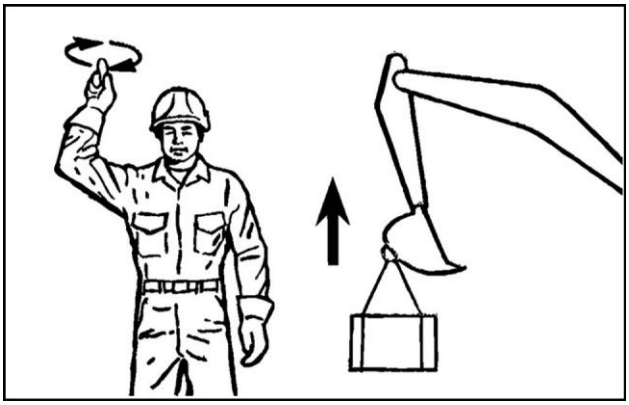

DC04E038 1

Face machine operatorr, raise right forearm vertical, with index finger pointing up and move hand in a small circular motion.

Lower load vertically

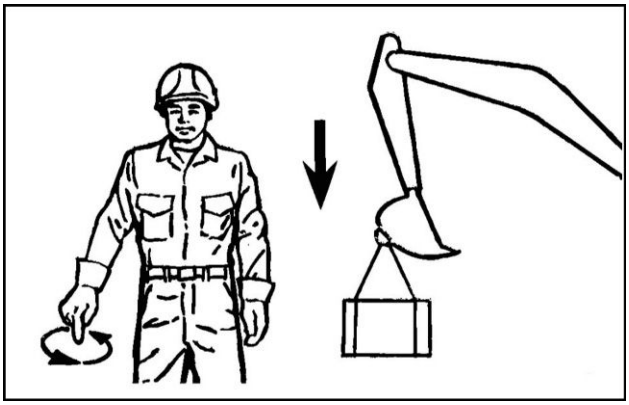

DC04E039 2

Face machine operator, extend right arm down, point index finger down and move hand in small circular motion.

Move load horizontally

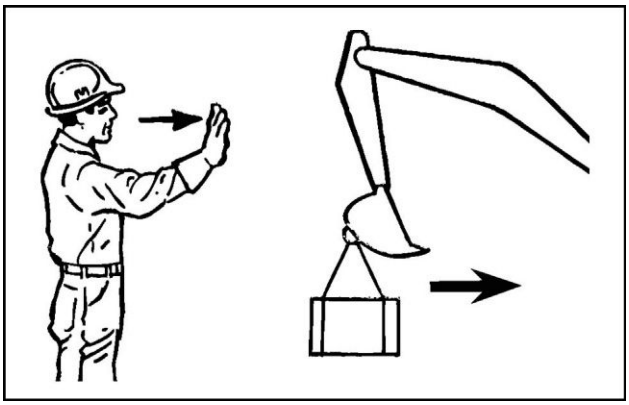

DC08E040 3

Face machine operator, extend right arm toward operator with hand facing operator and move hand in direction of movement required.

Move load out horizontally

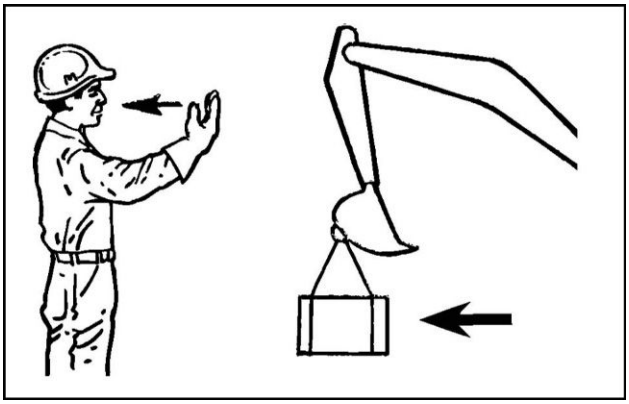

DC08E041 4

Face machine operator, extend right arm toward operator with back of hand facing operator and move hand in direction of movement required.

Raise boom

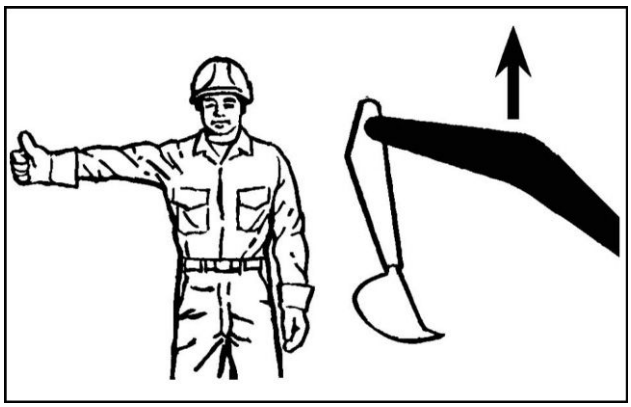

DC08E042 5

Face machine operator, extend right arm out horizontally from shoulder, make a fist with thumb up.

Lower boom

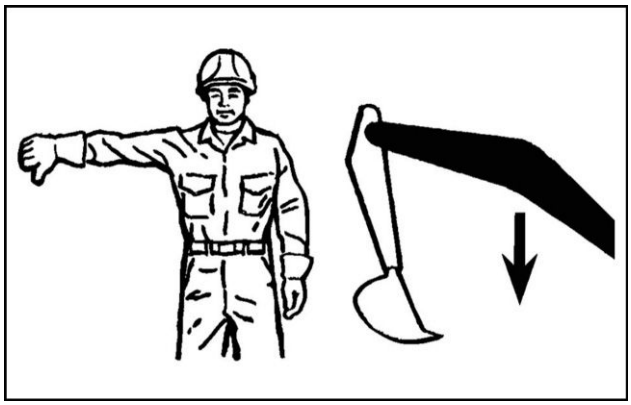

DC08E043 6

Face machine operator, extend right arm out horizontally from shoulder, make a fist with thumb down.

Swing left

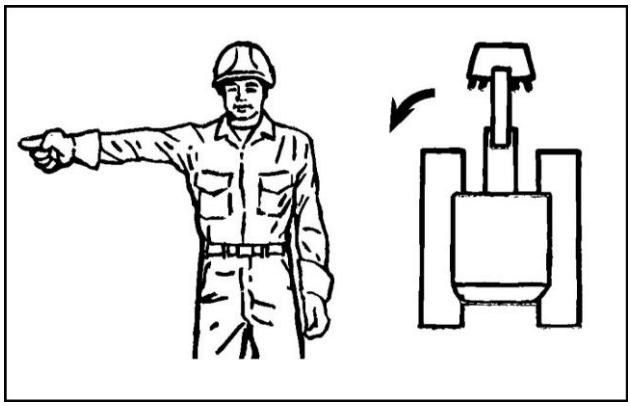

DC08E044 7

Face machine operator, extend right arm out horizontally from shoulder, make a fist with index finger pointing in swing direction.

Swing right

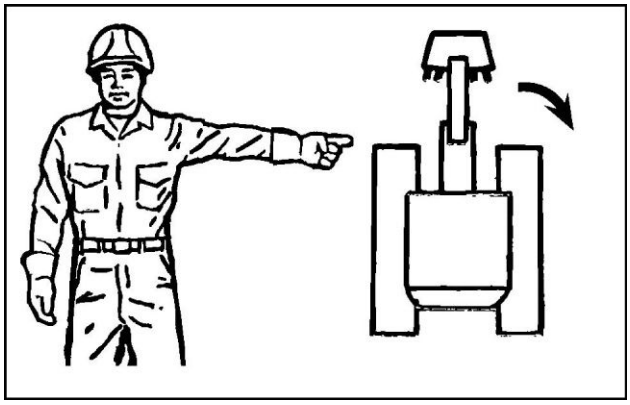

DC08E045 8

Face machine operator, extend left arm out horizontally from shoulder, make a fist with index finger pointing in swing direction.

Arm in

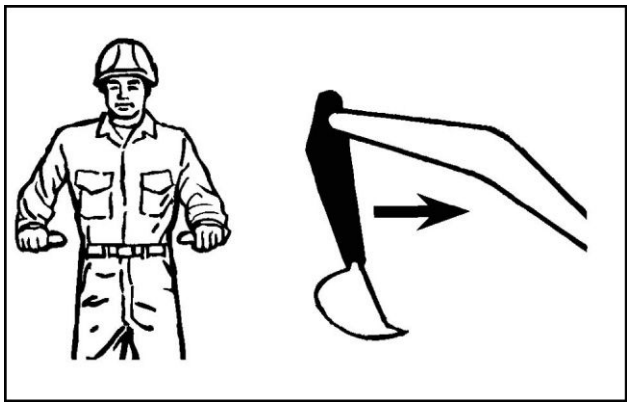

DC08E046 9

Face machine operator, bend at elbows with arms facing operator, make fists and point thumbs in toward each other.

Arm out

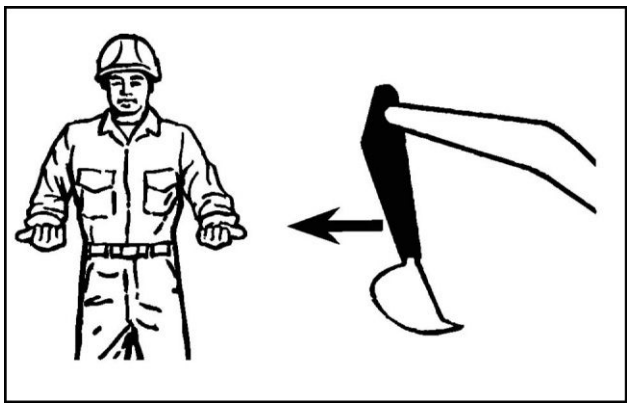

DC08E047 10

Face machine operator, bend at elbows with arms facing operator, make fists and point thumbs out away from each other.

Counter rotate left

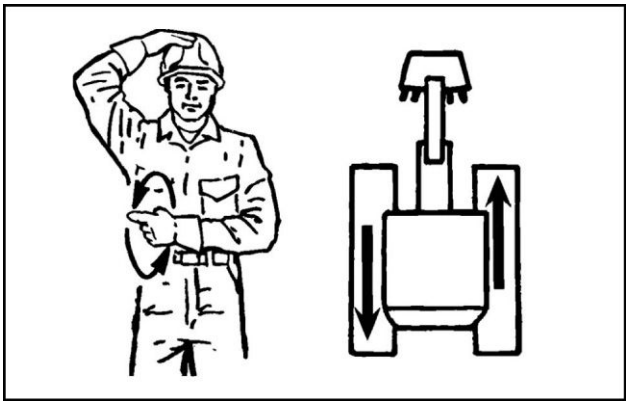

DC08E048 11

Face machine operator, place right hand on top of hard hat, bend left arm at elbow to the right, make a fist with left hand with index finger pointing out and rotate hand in a reverse circular motion.

Counter rotate right

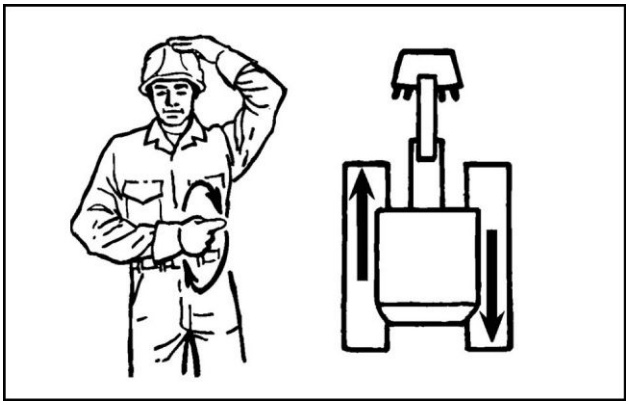

DC08E049 12

Face machine operator, place left hand on top of hard hat, bend right arm at elbow to the left, make a fist with right hand with index finger pointing out and rotate hand in a forward circular motion.

Travel forward

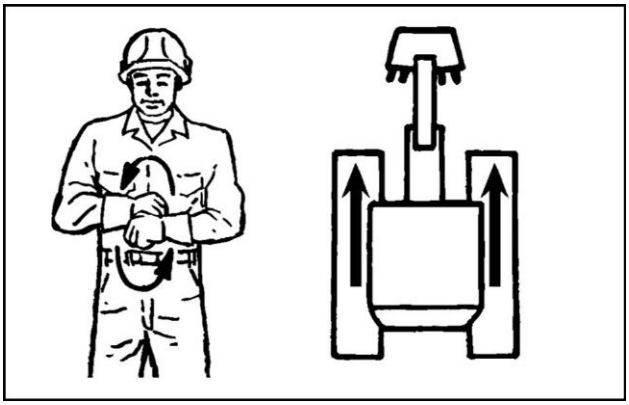

DC08E050 13

Face machine operator, bend both elbows in, make fists and rotate fists one over the other in a reverse circular motion.

Travel reverse

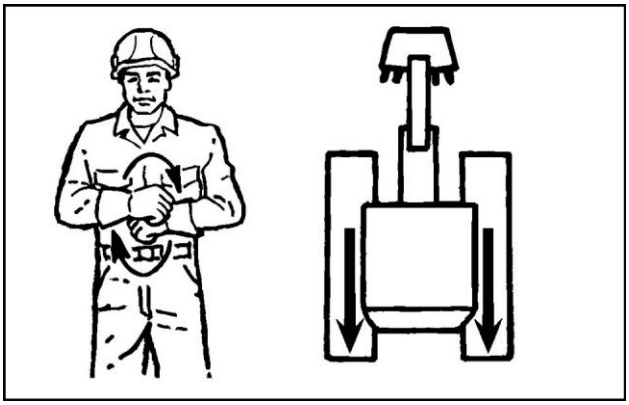

DC08E051 14

Face machine operator, bend both elbows in, make fists and rotate fists one over the other in a forward circular motion.

Close bucket (Bucket in or dig)

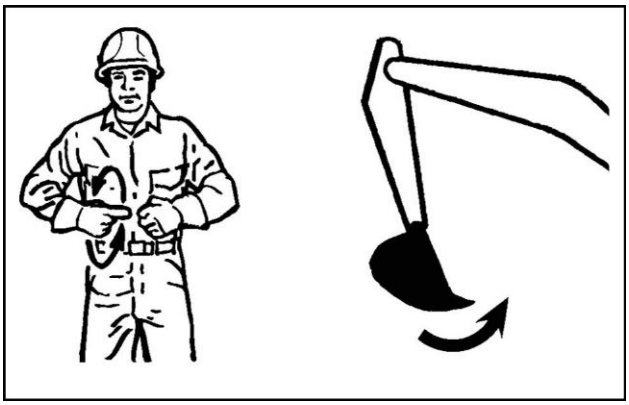

DC08E052 15

Face machine operator, hold left hand in, closed and stationary, hold right hand in, make a fist with index finger pointing toward left hand and move right hand in a small forward circular motion.

Open bucket (bucket out or dump)

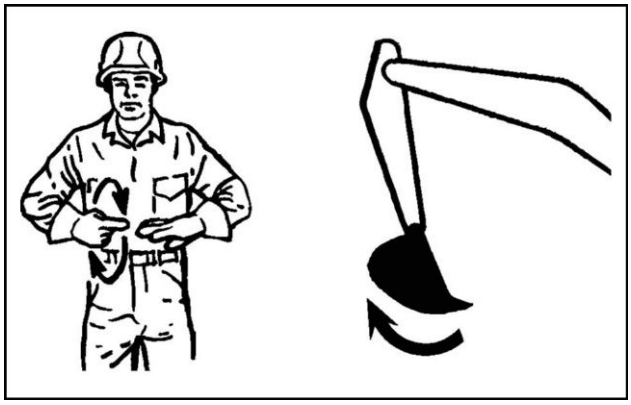

DC08E053 16

Face machine operator, hold left hand in, open and stationary, hold right hand in, make fist with index finger pointing toward left hand and move right hand in small forward circular motion.

Turn left

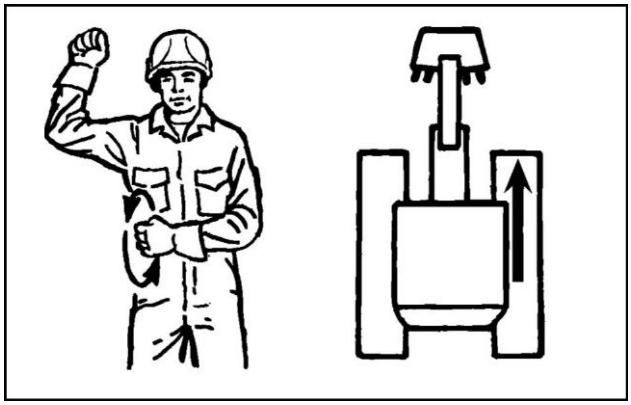

DC08E054 17

Face machine operator, raise right forearm up, make fist with right hand and hold stationary, bend left arm in, make fist with left hand and rotate left fist in a small reverse circular motion.

Turn right

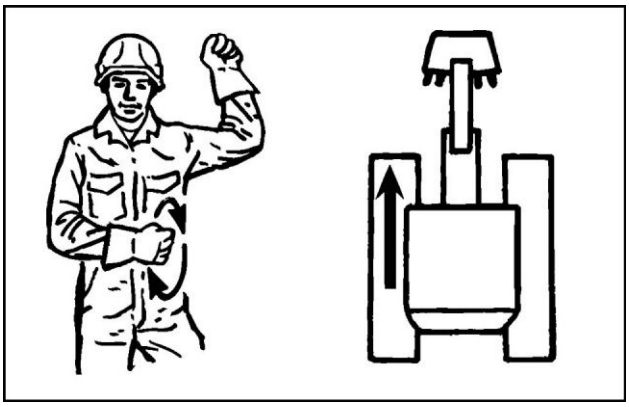

DC08E055 18

Face machine operator, raise left forearm up, make fist with left hand and hold stationary, bend right hand arm in, make fist with right hand and rotate right fist in a small forward circular motion.

Move this much

DC08E056 19

Face machine operator, raise both forearms up, hands open and facing each other, move hands in laterally indicating how far to go.

Move slowly

DC08E057 20

Face machine operator, raise left arm out horizontally toward right shoulder with hand open and facing down, point right index finger up toward open left hand and rotate right hand in a reverse circular motion. (Raise Load Slowly is illustrated).

Stop

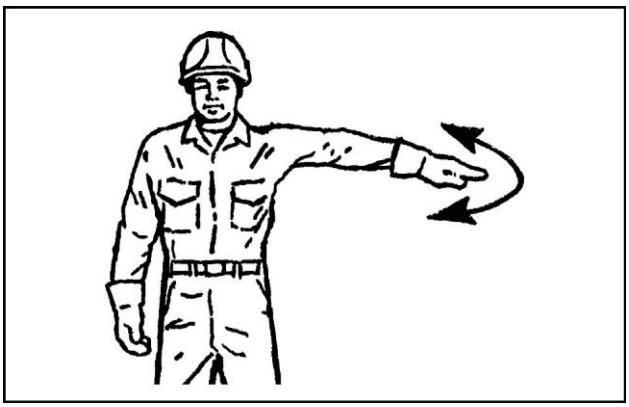

DC08E058 21

Face machine operator, raise left arm out horizontally from shoulder with hand open and facing down, move arm in a horizontal motion back and forth.

Emergency stop

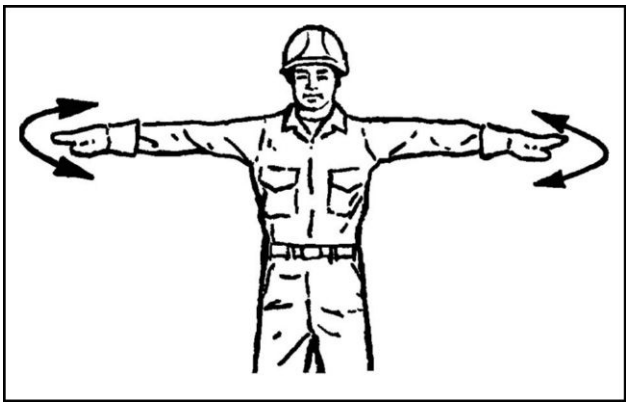

DC08E059 22

Face machine operator, raise both arms out horizontally from shoulders with hands open and facing down, move arms in a horizontal motion back and forth.

Stop engine

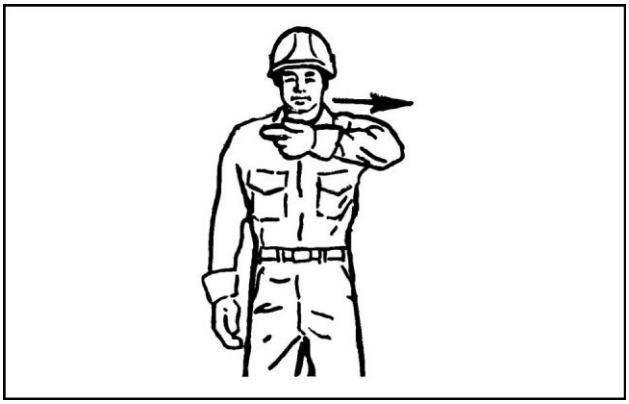

DC08E060 23

Face machine operator, right arm at side, draw left thumb or index finger across throat.

3 - CONTROLS/INSTRUMENTS

ACCESS TO OPERATOR'S PLATFORM

Frame - Access/Exit

Cab door

⚠ CAUTION

Pinch hazard!
Be careful not to get your hand, clothes, etc. caught in the door when closing it.
Failure to comply could result in minor or moderate injury.

C0046A

To open the door, use the handle **(1)** from the outside and use the handle **(2)** from the inside.

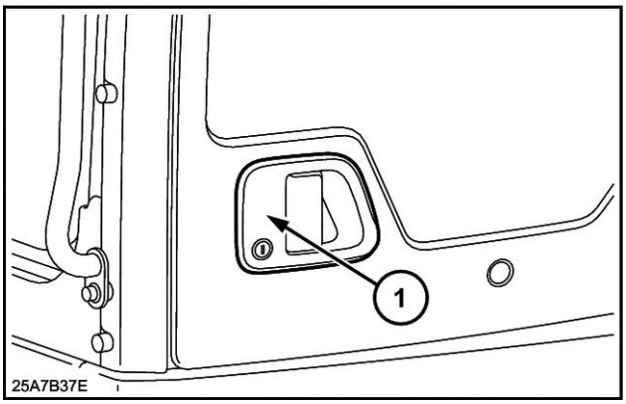

25A7B37E 1

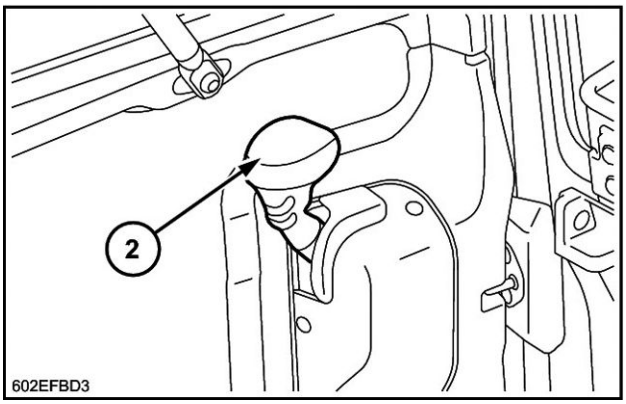

602EFBD3 2

The door can be latched in completely open position. To unlatch the door, tilt the lever **(3)** downward.

NOTICE: *Do not leave the door ajar. Fix it in a latched position.*

NOTICE: *When seated in the operator's compartment, with the engine running, make sure that you do not operate the left-hand control lever inadvertently when unlocking the door. To prevent any incident, place the function cancellation lever in raised position. (Refer to page **3-51**).*

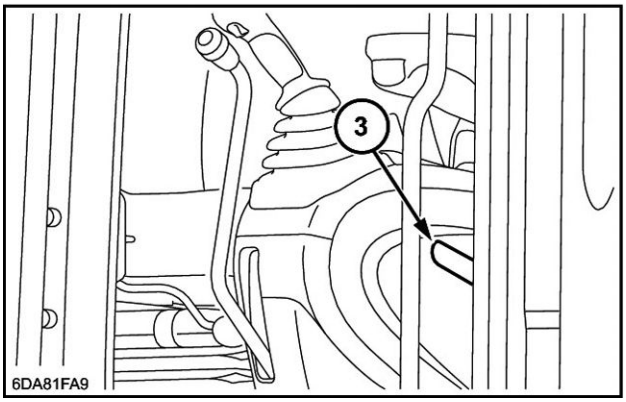

6DA81FA9 3

Steps and access handles

⚠ WARNING

Fall hazard!
In order to enter or exit the cab, the upper structure frame must be in line with the undercarriage.
Failure to comply could result in death or serious injury.

W0225A

⚠ WARNING

Fall hazard!
Clean the steps and access handles to remove all traces of grease, oil, mud, and ice (in winter).
Failure to comply could result in death or serious injury.

W0139A

⚠ WARNING

Fall hazard!
Jumping on or off the machine could cause an injury. Always face the machine, use the handrails and steps, and get on or off slowly. Maintain a three-point contact to avoid falling: both hands on the handrails and one foot on the step, or one hand on the handrail and both feet on the steps.
Failure to comply could result in death or serious injury.

W0141A

To get in or out of the machine use the steps **(2)**, the tracks and the access handles **(1)**.

NOTICE: *When alighting from or getting into the operator's compartment, never use the left-hand control arm or the control levers for assistance.*

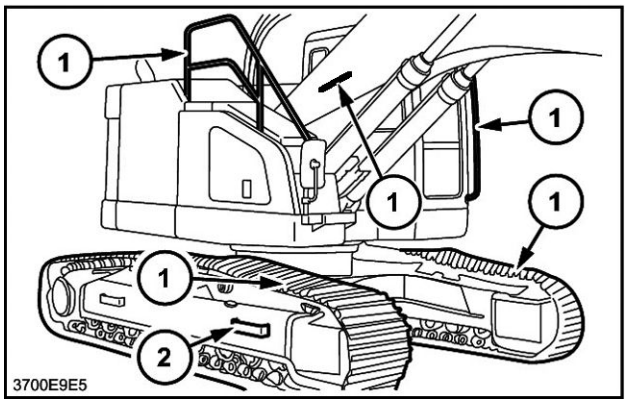

3700E9E5A 4

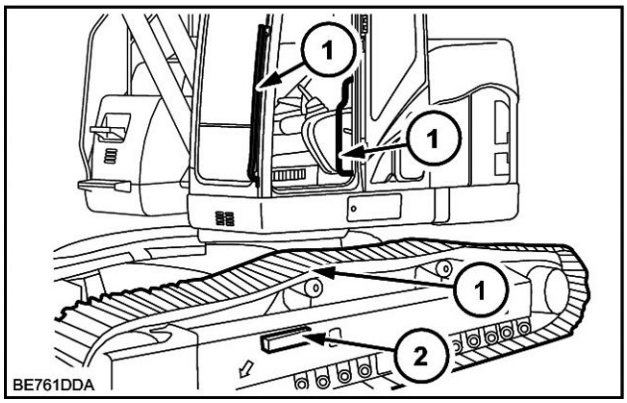

BE761DDA 5

Position of the operator’s compartment controls and accessories

⚠ WARNING

Misuse hazard!
Before starting the engine, make sure you are fully aware of the location and the function of each control.
Failure to comply could result in death or serious injury.

W0226A

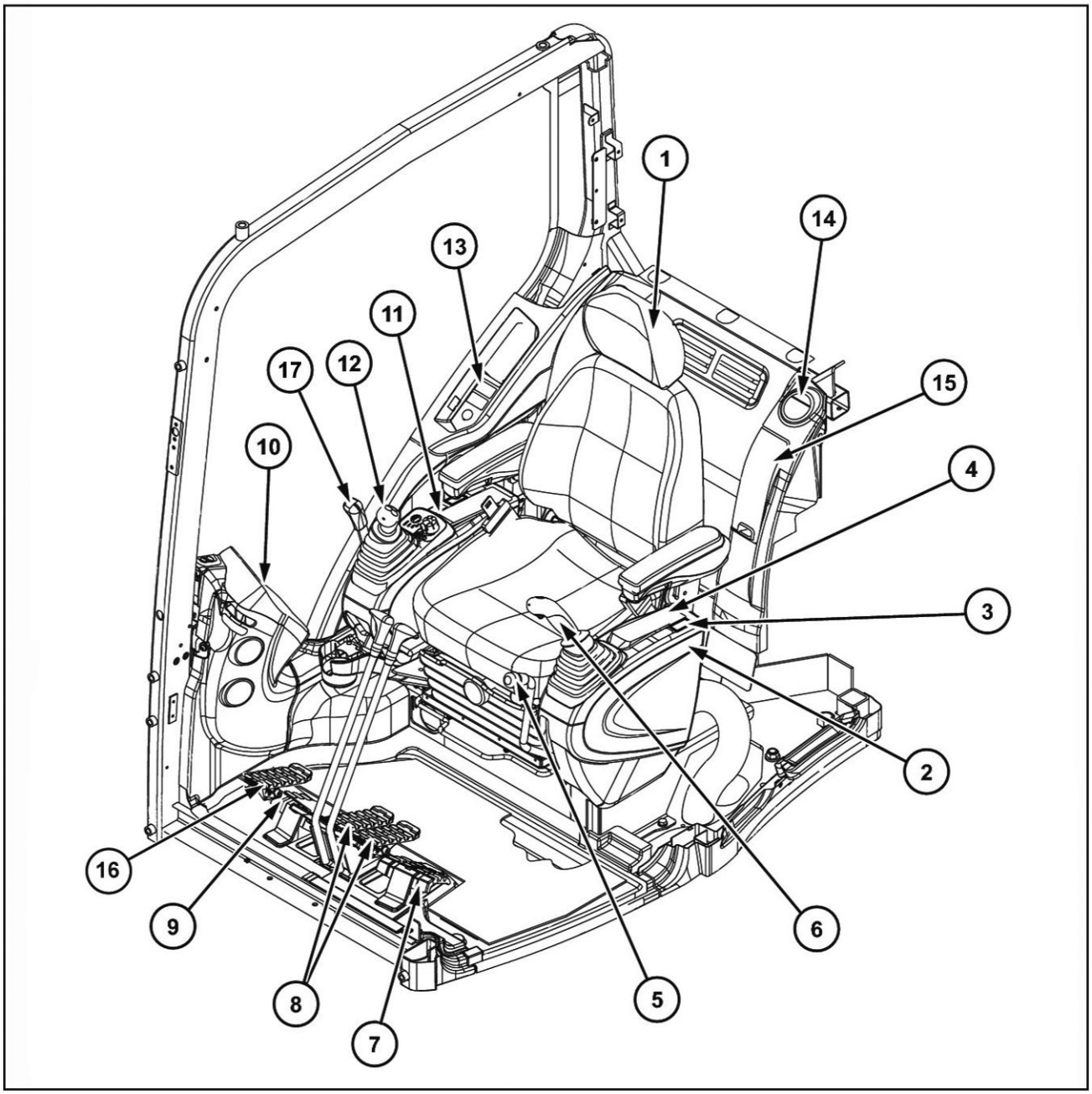

96B5C1C9X 1

1. Operator's seat
2. Left-hand control arm
3. Emergency shutdown switch
4. Air conditioning control switch
5. Function cancellation lever
6. Left-hand control lever, arm and upperstructure swing controls
7. Footrest or option pedal
8. Travel control levers and pedals
9. Footrest or option pedal or offset boom pedal (if equipped)
10. Front right-hand console monitor display
11. Right-hand console
12. Right-hand control lever, boom and bucket controls
13. Right-hand switch panel
14. Air vents
15. Fuse box
16. Travel control pedal
17. Dozer blade control lever (standard machine only)

OPERATOR'S SEAT

Air suspension seat adjustments

In order to operate the machine correctly and with maximum efficiency and comfort, adjust the seat to suit the weight and size of the operator.

NOTE: *The adjustment of the seat can only be carried out when the operator is seated in the seat, the engine is shut down and the ignition key is set to "ACC" (accessory current supply).*

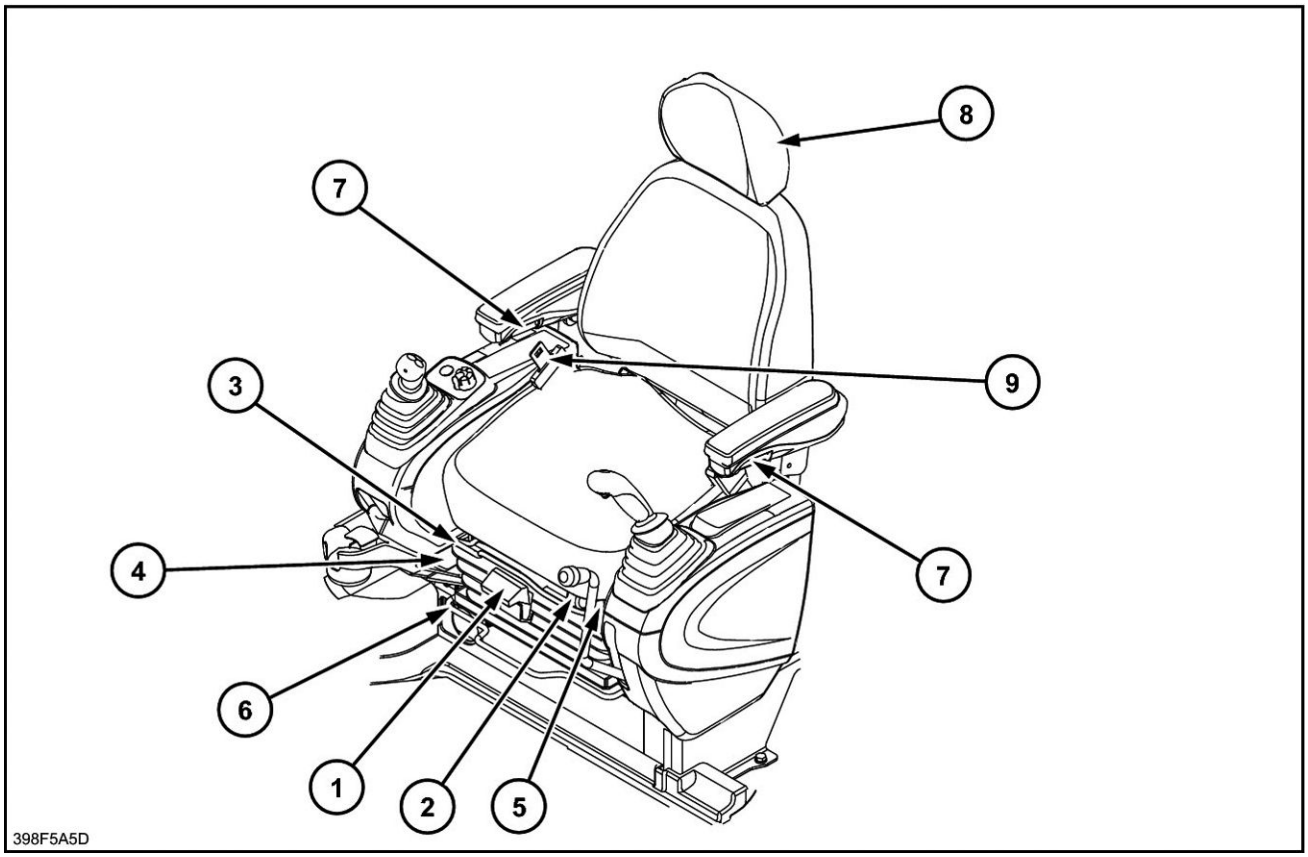

398F5A5D 1

1. Combined height and weight adjustment
2. Weight adjustment indicator
3. Fore/aft adjustment
4. Seat back angle adjustment
5. Lumbar support adjustment
6. Seat and control arm assembly fore and aft adjustment
7. Armrest angle adjustment
8. Headrest adjustment
9. Seat belt

Combined height and weight adjustment

Lower the handle **(1)** to decrease the rigidity of the suspension. Raise the lever **(1)** backward to obtain harder suspension. The indicator **(2)** must be green when the operator is sitting on the seat.

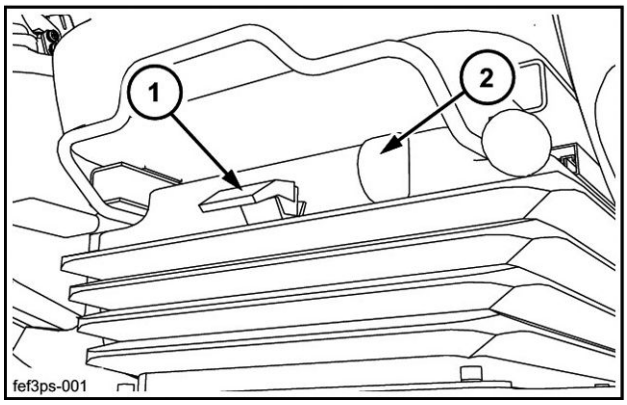

FEF3PS-001 2

Fore/aft adjustment

Hold the control **(3)** in the raised position, slide the seat to the required position and then release the control.

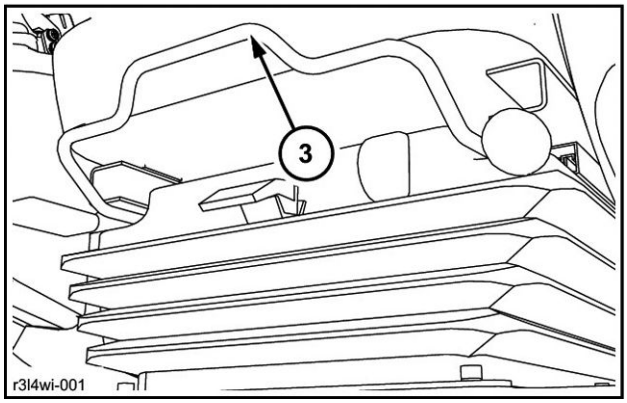

R3L4WI-001 3

Seat back angle adjustment

⚠ WARNING

Unexpected machine movement!
Before tilting the back of the seat forward, you must raise the armrests. This prevents accidental operation of the control levers.
Failure to comply could result in death or serious injury.

W0210A

To adjust the seat back angle, hold the lever **(4)** in the raised position. Move with the seat-back to the desired position and then release the lever.

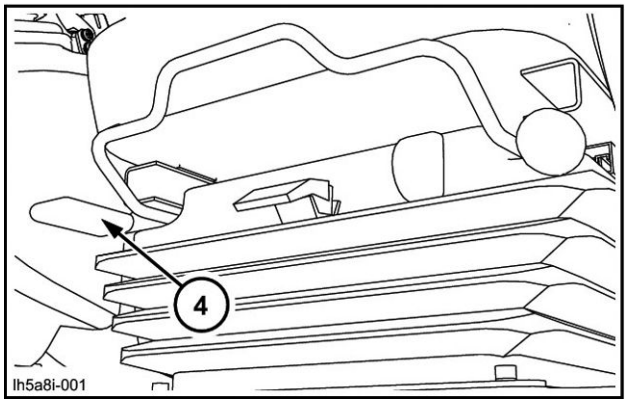

LH5A8I-001 4

Lumbar support adjustment

Use the inflation bulb **(5)** to inflate the lumbar support. Press the button on the tip of the inflation bulb **(5)** to deflate the lumbar support.

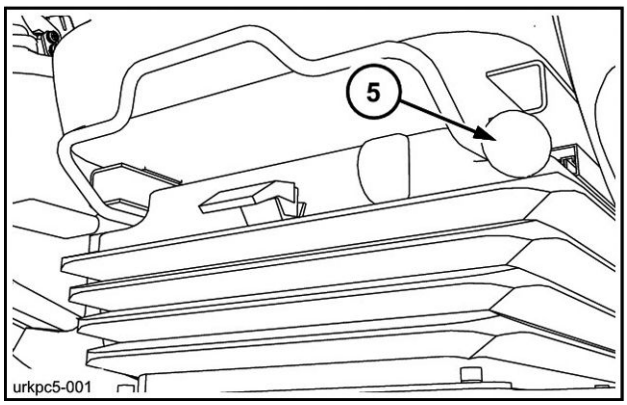

URKPC5-001 5

Seat and control arm assembly fore and aft adjustment

Pull the control **(6)** upwards, and slide the seat and control arm assembly to the desired position, then release the control.

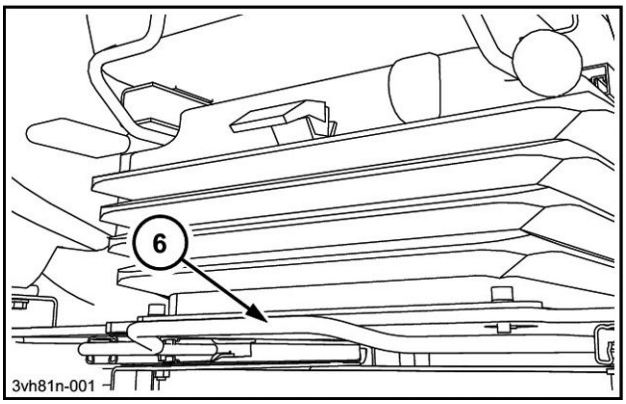

3VH81N-001 6

Armrest angle adjustment

Raise the armrest and adjust to the desired angle using the knob **(7)**, then lower the armrest.

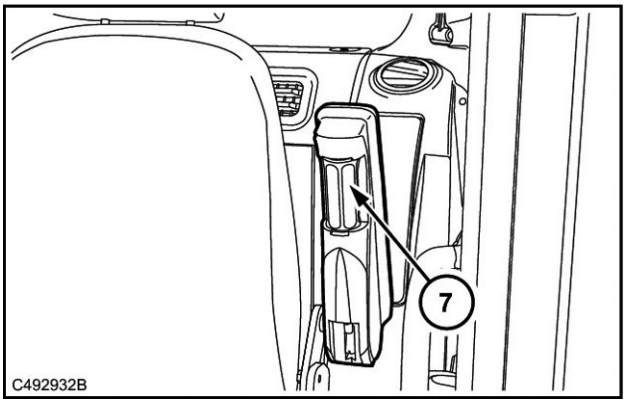

C492932B 7

Headrest adjustment

The headrest **(8)** can be adjusted upward and downward and backward and forward.

NOTE: *To make the headrest return to its initial position (to the rear), tilt it completely forward and then release it.*

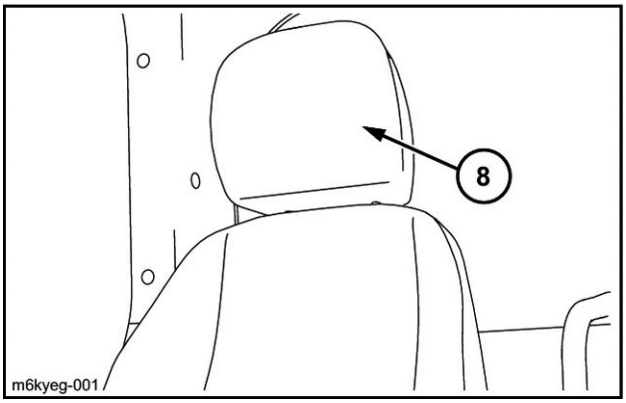

M6KYEG-001 8

Seat belt

⚠ WARNING

Equipment failure could cause accident or injury!
Always fasten seat belt securely before operating the machine. Inspect seat belt parts for wear and/or damage. To ensure operator safety, replace any and all damaged parts of the seat belt prior to operation.
Failure to comply could result in death or serious injury.

W0046A

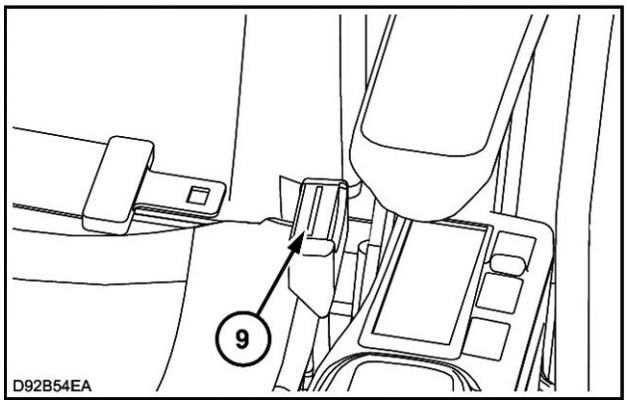

D92B54EA 9

Sit comfortably in the operator's seat, pull out a long section of belt and engage it in the fastening system **(9)**.

NOTE: *If the section of belt pulled out is not long enough, release it, so it rolls up and then pull it out again.*

To release the seat belt, press down on the releasing lever **(9)**.

ATTENTION: *Inspect the seat belt. Make sure that it is not damaged, that the mounting screws are correctly tightened and replace any defective parts.*

The seat belt must be kept clean. Use only soap and water to clean the belt, do not use bleach or dyes.

FORWARD CONTROLS

Hand control levers and pedals

Arm and upperstructure swing left-hand control lever

The speed of movement of the arm or the upperstructure swing depends on the control lever tilt angle. In the intermediate position two movements can be obtained simultaneously.

NOTE: *When the upperstructure swing control is released, the upperstructure may continue to rotate due to the force of inertia. In this event, make allowance for the extra movement by releasing the control slightly earlier.*

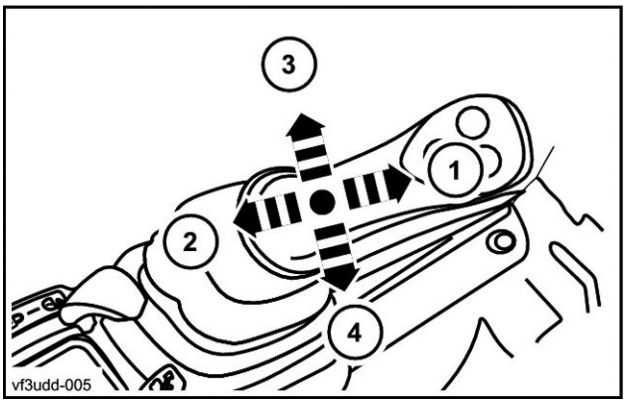

VF3UDD-005 1

(1) The arm extends.
(2) The arm retracts.
(3) The upperstructure turns to the left.
(4) The upperstructure turns to the right.

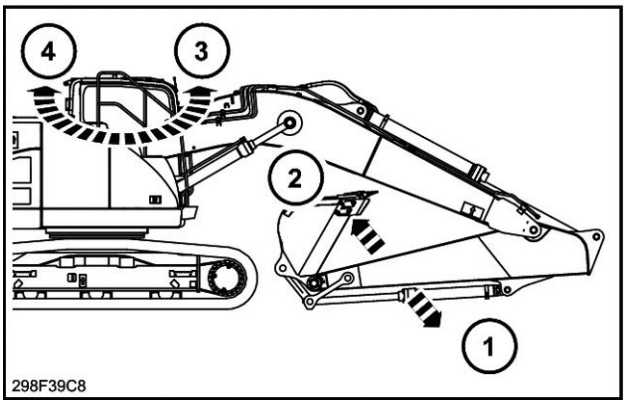

298F39C8 2

Boom and bucket right-hand control lever

The speed of movement of the boom or the bucket depends on the control lever tilt angle. In the intermediate position two movements can be obtained simultaneously.

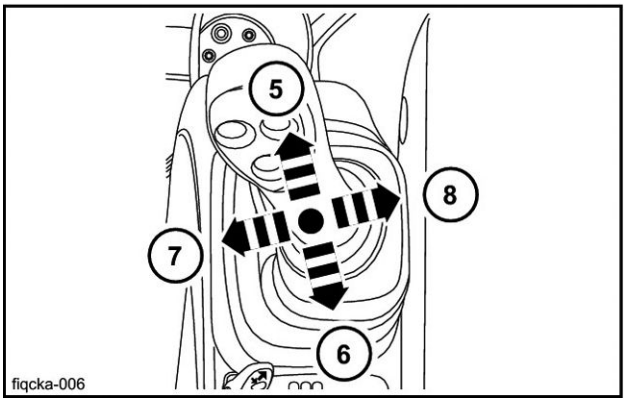

FIQCKA-006 3

(5) The boom lowers.
(6) The boom raises.
(7) The bucket retracts (filling).
(8) The bucket extends (dumping).

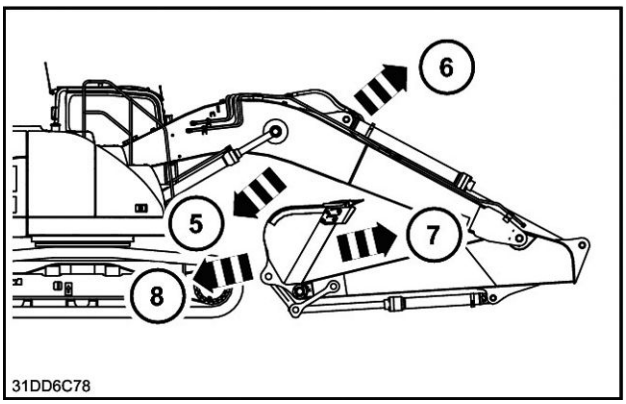

31DD6C78 4

Boom and upperstructure swing left-hand control lever (optional)

The speed of movement of the boom or the upperstructure swing depends on the control lever tilt angle. In the intermediate position two movements can be obtained simultaneously.

NOTE: *When the upperstructure swing control is released, the upperstructure may continue to rotate due to the force of inertia. In this event, make allowance for the extra movement by releasing the control slightly earlier.*

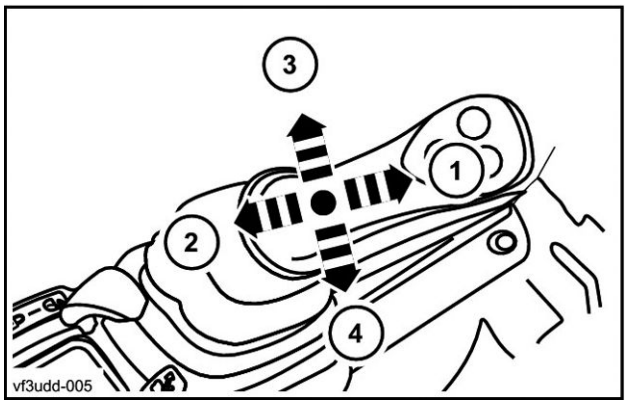

VF3UDD-005 5

(1) The boom lowers.
(2) The boom raises.
(3) The upperstructure turns to the left.
(4) The upperstructure turns to the right.

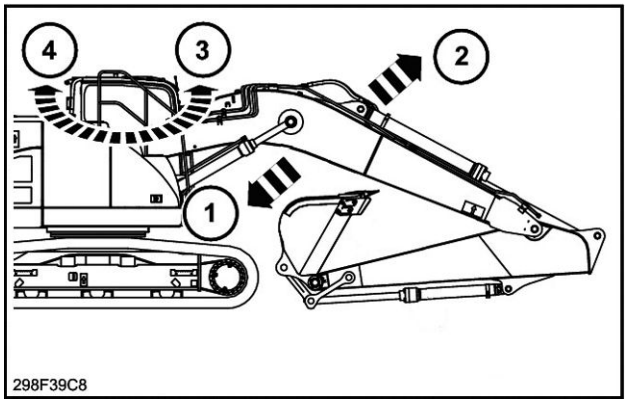

298F39C8A 6

Arm and bucket right-hand control lever (optional)

The speed of movement of the arm or the bucket depends on the control lever tilt angle. In the intermediate position two movements can be obtained simultaneously.

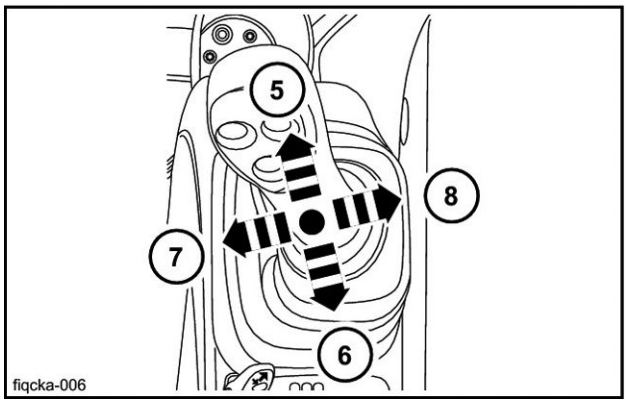

FIQCKA-006 7

(5) The arm extends.
(6) The arm retracts.
(7) The bucket retracts (filling).
(8) The bucket extends (dumping).

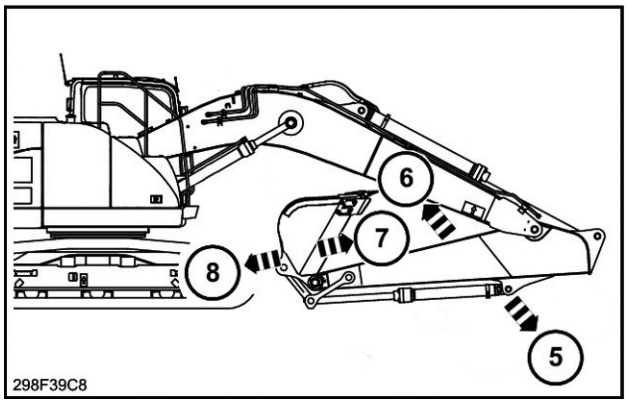

298F39C8C 8

Travel control levers and pedals

These levers and pedals are used to move the machine. (Refer to page **4-15**).

ATTENTION: *Lock the travel pedal* ***(1)*** *when not in use. See chapter "Locking the travel pedal".*

NOTE: *Travel speed either forward or in reverse depends on the position of the travel speed selector. (Refer to page* ***3-24****).*

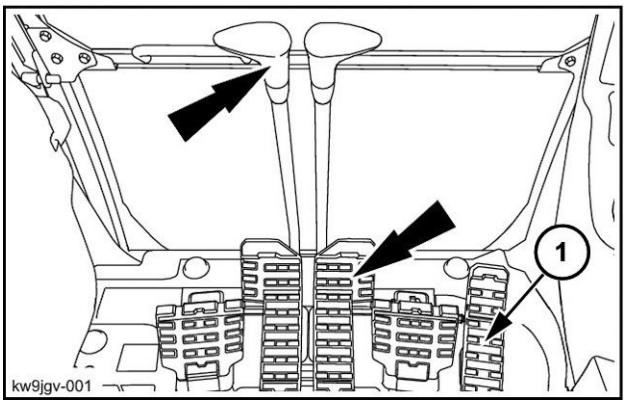

KW9JGV-001D 9

Auxiliary pedal (if equipped)

⚠ WARNING

Unexpected machine movement!
ALWAYS lock the auxiliary pedals when not in use.
Failure to comply could result in death or serious injury.

W0222A

This pedal is used for optional accessories such as hydraulic breaker, if equipped, etc. (Refer to page **4-34**).

See chapter "Adjustment and locking auxiliary pedals".

ATTENTION: *Consult your CASE CONSTRUCTION Dealer before mounting optional tools.*

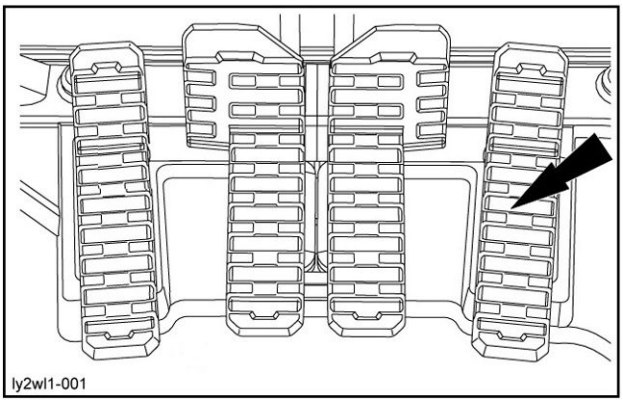

LY2WL1-001ZA 10

Low flow hydraulic circuit control pedal (if equipped)

⚠ WARNING

Unexpected machine movement!
ALWAYS lock the auxiliary pedals when not in use.
Failure to comply could result in death or serious injury.

W0222A

This pedal is used to direct the clamshell.

(1) The clamshell turns to the right.
(2) The clamshell turns to the left.

See chapter “Adjustment and locking auxiliary pedals”.

ATTENTION: *Consult your CASE CONSTRUCTION Dealer before mounting optional tools.*

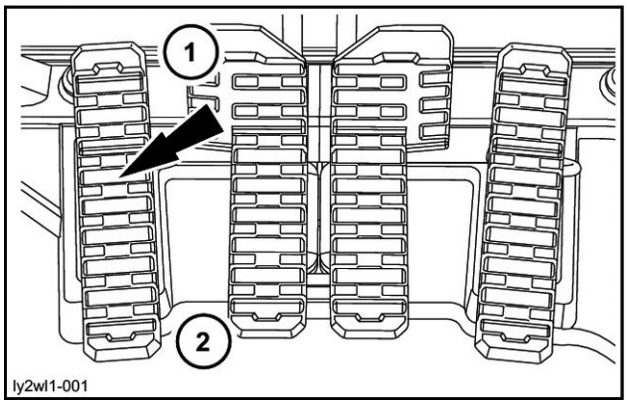

LY2WL1-001 11

Low flow hydraulic circuit proportional switch (if equipped)

This switch is used for optional accessories such as clamshell, if equipped, etc.

NOTICE: *Consult your CASE CONSTRUCTION Dealer to select the optional accessory compatible with your machine and to correctly adjust the flow required for its use.*

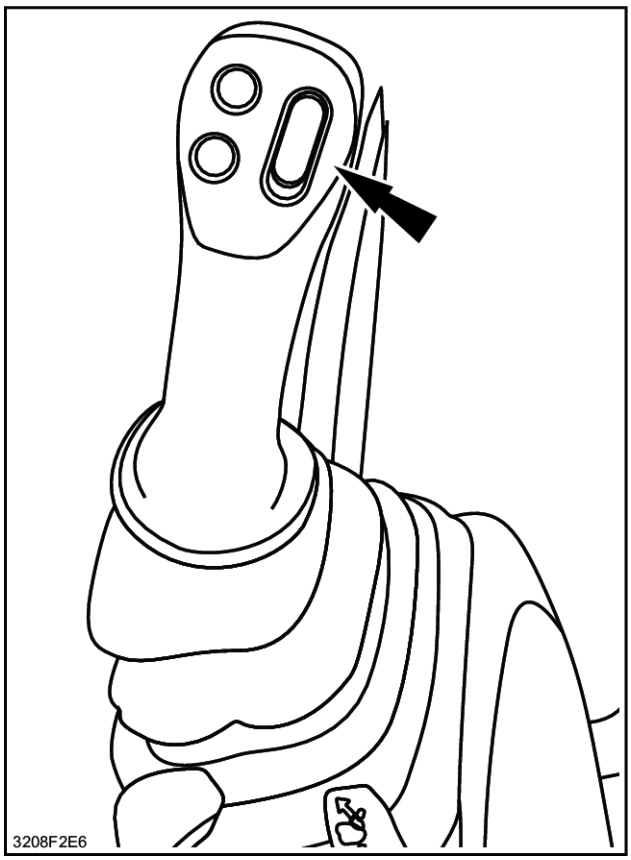

3208F2E6 12

Offset boom pedal (if equipped)

⚠ WARNING

Unexpected machine movement!
ALWAYS lock the auxiliary pedals when not in use.
Failure to comply could result in death or serious injury.

W0222A

This pedal is used to adjust the offset boom.

(1) The offset boom pivots to the right.
(2) The offset boom pivots to the left.
(3) The pedal is locked. (Place the protection on the pedal to lock it).
(4) The pedal is unlocked. (Place the protection forwards to use the pedal).

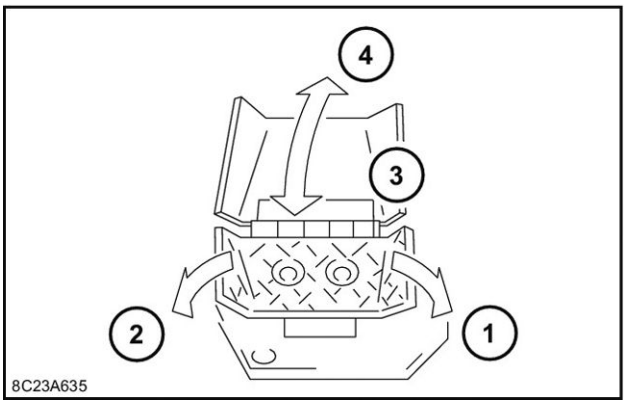

8C23A635 13

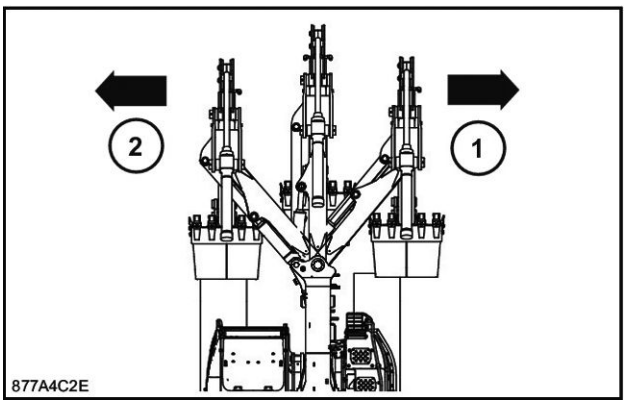

877A4C2E 14

Footrest

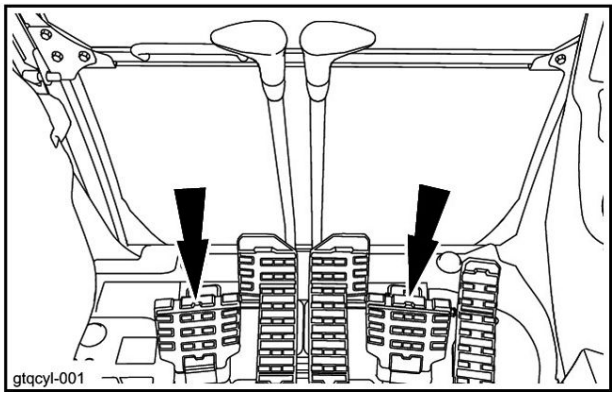

GTQCYL-001C 15

Locking the travel pedal

When the travel pedal is not used, it is necessary to lock the pedal.

For locking the pedal, engage the locking pin **(1)** in the locking hole **(2)**.

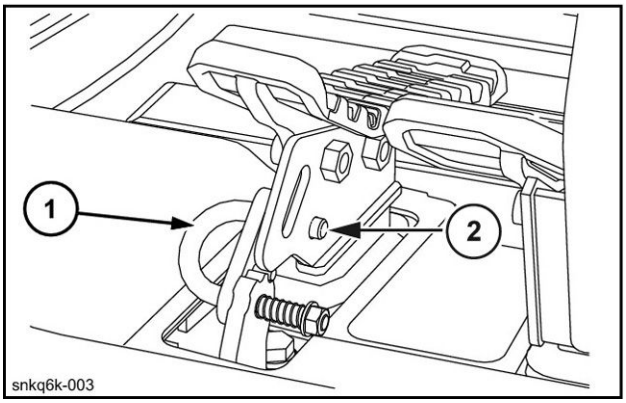

SNKQ6K-003A 16

For using the pedal, place the locking pin **(1)** in this position.

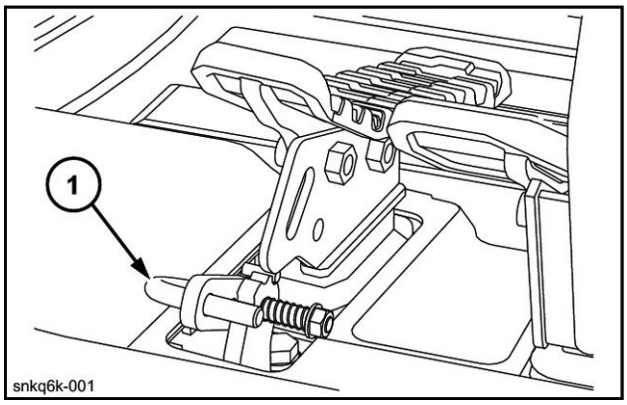

SNKQ6K-001 17

NOTE: *If the locking pin **(1)** is in position **(3)**, only forward travel is possible.*

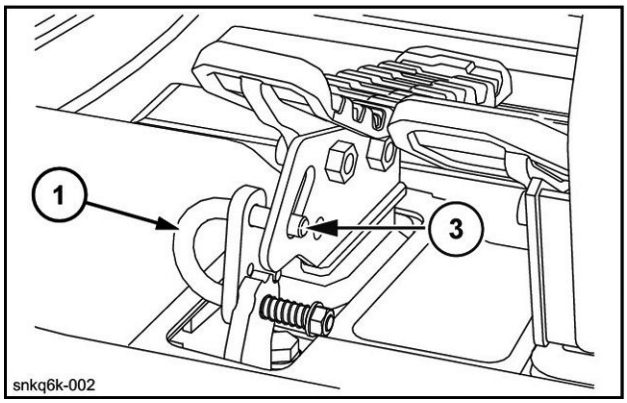

SNKQ6K-002A 18

Adjustment and locking the auxiliary pedals (if equipped)

⚠ WARNING

Unexpected machine movement!
Shut down the engine before adjusting the auxiliary pedals.
Failure to comply could result in death or serious injury.

W0277A

The adjustment of auxiliary pedals is adapted for use with the accessory installed on the attachment.

Accessory using two pedal flows can be operated in two directions, the locking pin **(1)** is removed.

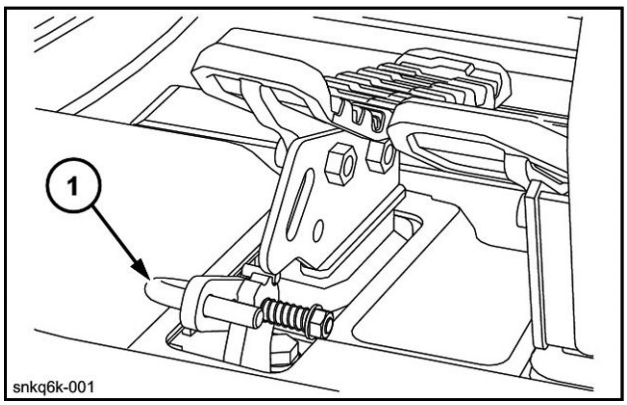

SNKQ6K-001 19

Accessory using a single flow can be operated in only one direction, the locking pin **(1)** is engaged.

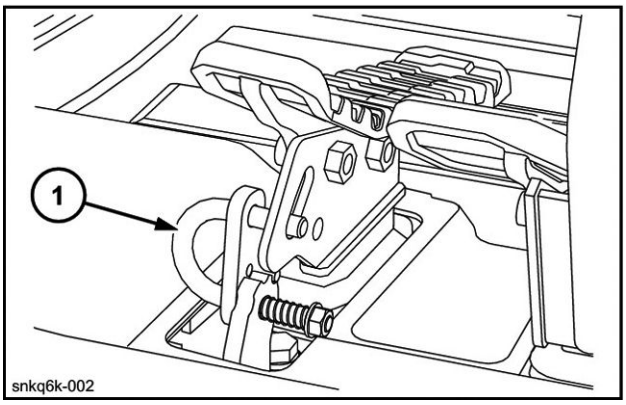

SNKQ6K-002 20

Accessory removed, the pedals must be locked, the locking pin **(1)** is engaged in the locking hole.

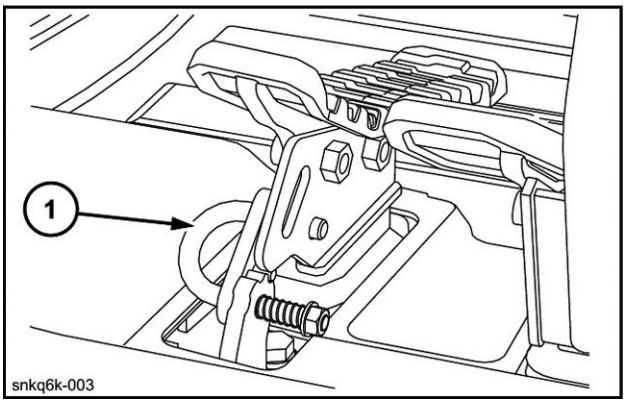

SNKQ6K-003 21

Windshield

⚠ CAUTION

Pinch hazard!
Make sure you correctly follow the instructions in this manual when handling the windshield. If you do not handle the windshield correctly, it could slip and injure your fingers or hands.
Failure to comply could result in minor or moderate injury.

C0045A

Opening

1. Fold the sunshield **(1)** (optional) back against the windshield and operate the lever **(2)**. Hold the lower and upper handles **(3)** and carefully raise the windshield.

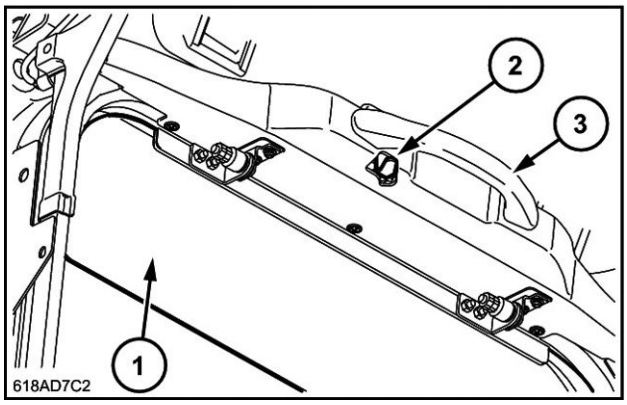

618AD7C2 1

2. Pull the windshield to the rear until it engages perfectly behind the cab.

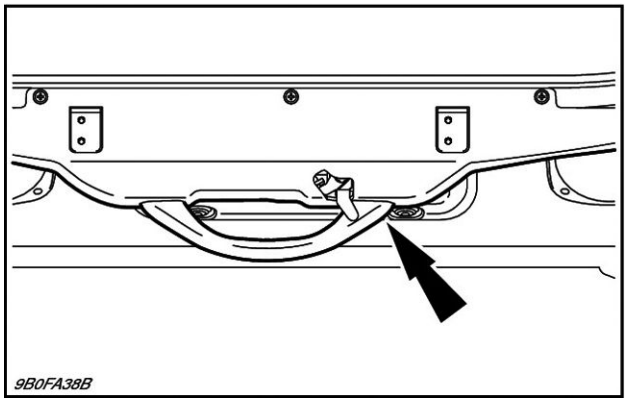

9B0FA38B 2

Closing

1. Use the lever **(2)** to release the windshield.
2. Hold both handles **(3)** and carefully lower the windshield. Make sure the window is completely down.
3. Make sure the top of the windshield is correctly latched.

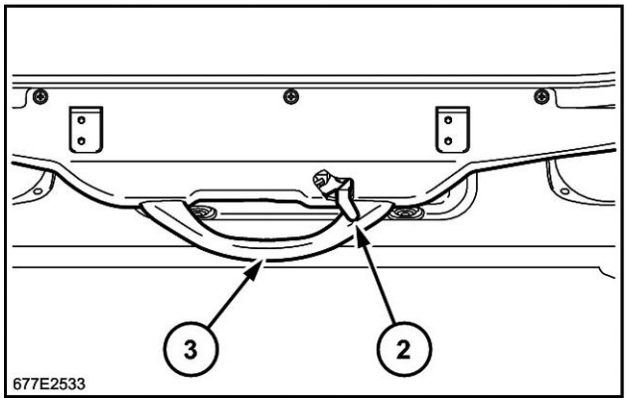

677E2533 3

Front lower window

The front lower window may only be removed when the windshield is open.

1. Remove the window from its housing by sliding it upward.

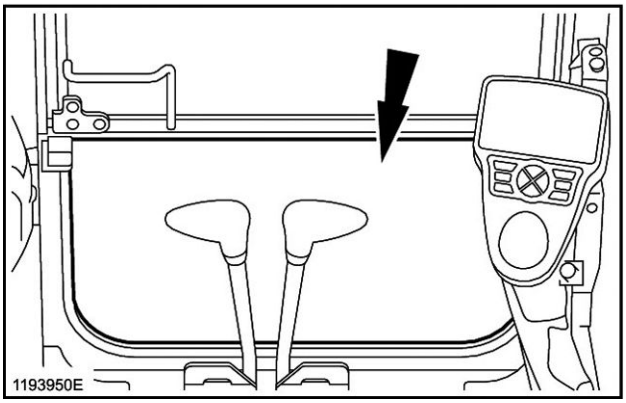

1193950E 1

2. Place the window in the storage position provided to the left of the operator's seat and then engage it correctly.

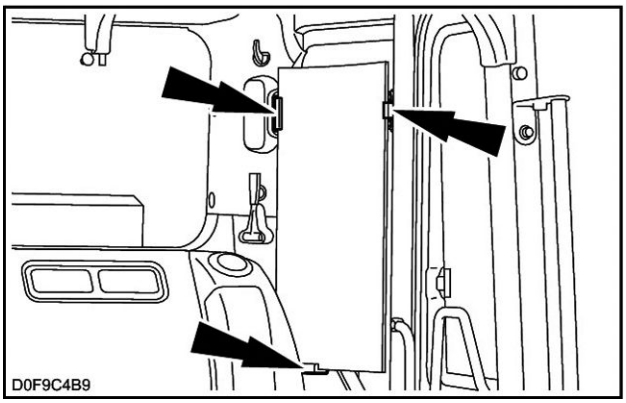

D0F9C4B9 2

Front right-hand console

1. Temperature probe
   Do not place objects on top of it.
2. Monitor display
   Clock, Fuel Meter, Coolant Water Thermo meter, Hydraulic Oil Thermo meter.
   Displays the function selection status.
   Displays the machine status.
   Displays the back monitor.
   Displays the machine maintenance status.
3. Monitor switch
   Selects the machine status. The monitor display can be switched.
4. Air vents
   The air vents control the circulation and direction of air flow. The air vents are opened and controlled manually.

   ATTENTION: *The air vents must always be open when the air conditioning is in use.*

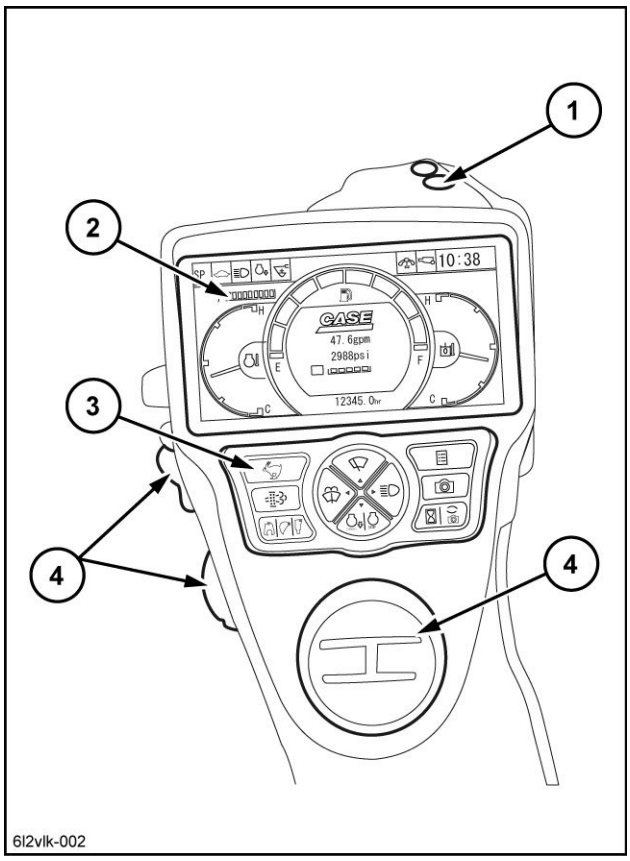

6L2VLK-002 1

Cigarette lighter or electrical socket (24 volts)

The ignition key being in the **"On"** position, press then release the cigarette lighter **(4)**.

ATTENTION: *Do not keep the cigarette lighter pushed in, to avoid damage.*

NOTICE: *If the cigarette lighter does not move outwards 30 seconds after pressing it in, pull it out manually, since otherwise the electrical circuit could be damaged; consult your CASE CONSTRUCTION Dealer.*

NOTE: *Once the cigarette lighter has been removed from its socket, the latter can be used as a 24 volts electrical socket.*

NOTICE: *It is strictly prohibited to connect devices of a different voltage.*

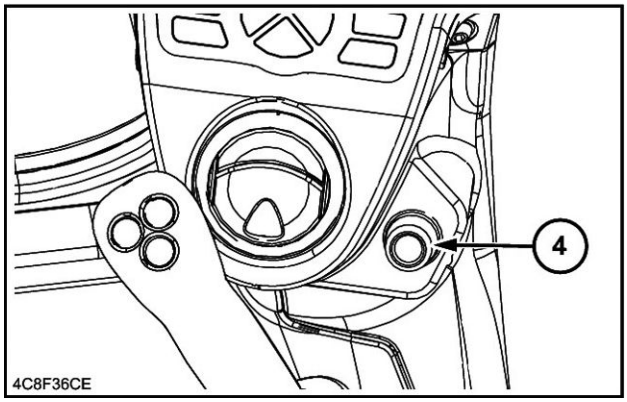

4C8F36CE 1

System display and function control panel

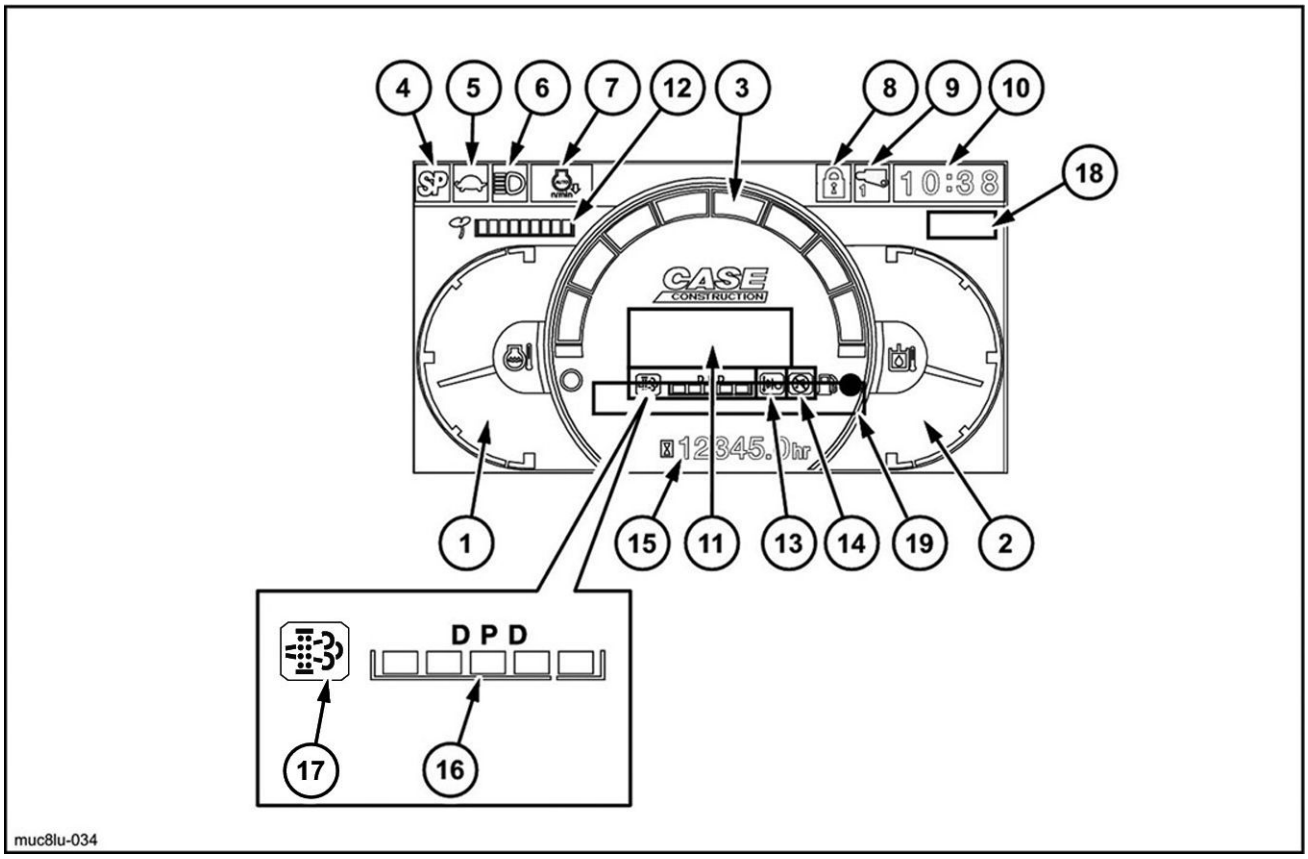

MUC8LU-034Z 1

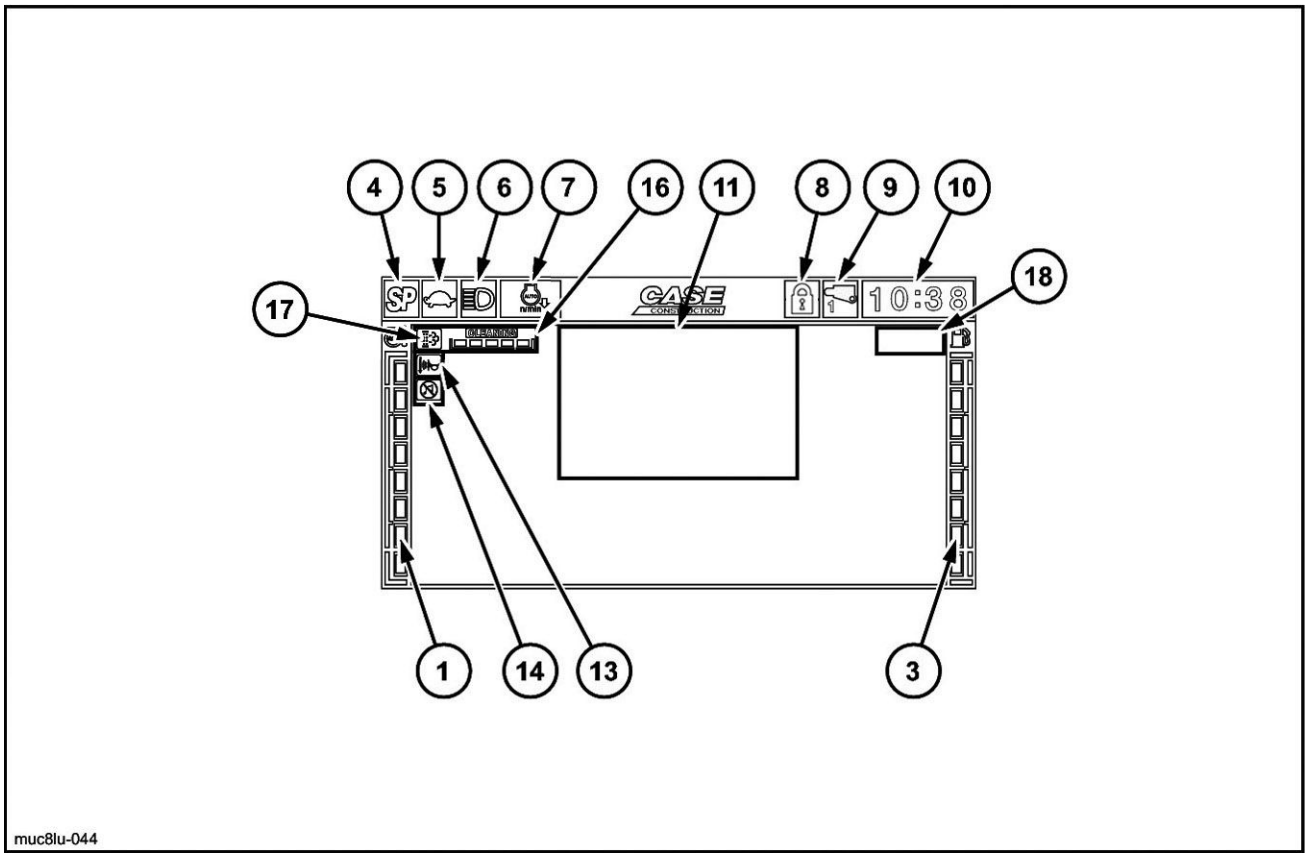

MUC8LU-044Z 2

1. Engine coolant temperature gauge
   Displays the temperature of the engine coolant.
   The lower zone indicates that the engine coolant temperature is low.
   When the temperature gauge display reaches the upper zone, an alarm sounds and "Over heat" is displayed (see "Message screens").
   Lower the engine speed.
   If the temperature does not go down, stop the engine, remove the ignition key, and investigate the cause.
2. Hydraulic oil temperature gauge
   Displays the temperature of the hydraulic oil.
   The lower zone indicates that the hydraulic oil temperature is low.
   When the temperature gauge display reaches the upper zone, an alarm sounds and "Over heat" is displayed (see "Message screens").
   Lower the engine speed.
   If the temperature does not go down, stop the engine, remove the ignition key, and investigate the cause.
3. Fuel gauge
   Displays the remaining amount of fuel by the number of lit segments.
   When all are lit, it indicates that the fuel tank is full.
   When only 1 is lit, an alarm sounds and "Low fuel" is displayed (see "Message screens").

   NOTE: *It is not necessary to wait until the fuel tank is empty before filling with fuel. If the tank becomes empty, air bleeding of the fuel system is required.*
4. Work mode icon

   These indicators display the initial work mode and the engine speed that was selected with the engine acceleration button and work mode selector. (Refer to page **3-58**).
5. Travel mode icon

   At low speed, is displayed.

   At high speed, is displayed.
6. Working light

   Displayed when the light is on.
7. Engine auto idling and stop selection display

   Displayed when auto idling is selected. “Auto n/min”.

   Displayed when auto stop is selected. “Auto idle stop”.

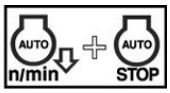

   Displayed when auto idling and auto stop are selected. “Auto n/min” and “Auto idle stop”.
8. Free swing, swing parking and anti-theft protection

   Displayed when swing parking is operating (for service use only).

   Displayed when the anti-theft protection function is operating.

   Displayed when free swing is operating.
9. Displays the selected attachment

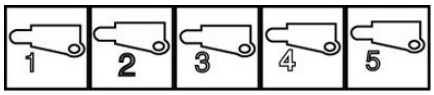

   Hydraulic breaker

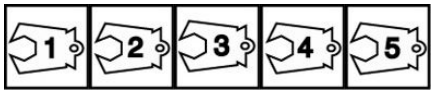

   Crusher grapple
10. Clock display
    (Refer to page **3-48**).
11. Auxiliary setting display
    When an option circuit is mounted, the selected flow and pressure are displayed.

MUC8LU-043Z 3

Icon display
The setting that the wiper, idling and glow switches are switched to are displayed largely in the middle of display.
• Wiper operation

Displayed when the wiper operation is switched.

1st speed

2nd speed

Stop

• Idle mode
Displayed when the engine auto idling and idle stop operations are switched.

Auto idling

Auto idle stop

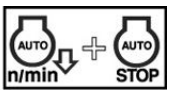

Auto idling and idle stop

• Pre-heating (glowing)

12. Eco gauge
The number of indicators on this gauge increases when the operating state is energy-saving operation. If high-load operations are performed, the number of gauge indicators decreases.
The state of energy-saving operations is indicated.
• No mechanical abnormalities will occur even if the number of gauge indicators decreases. However, to help conserve the environment, try to perform energy-saving operations within the green range, so long as doing so does not hinder work.
Key points for energy-saving operations
• Try to use **H** mode or **A** mode instead of **SP** mode.
• Avoid sharp lever operations.
• Avoid high load and relief operations.
• Use auto idle and one-touch idle.
Also, use idle stop to stop unnecessary idling.
Ask your CASE CONSTRUCTION Dealer about how to turn the eco gauge display **"On"** and **"Off"**.

13. Auto pressure boost icon

Displayed when the maximum output state is entered automatically for the attachment.

14. Mute icon

Displayed when the radio volume is muted.

15. Hour meter
The hour meter displays the engine operation time in units of 0.1 hr. (6 min.).

16. **DPD** (Diesel Particulate Diffuser) gauge
Indicates the state of the **DPD** filter. When 5 gauge indicators are lit, **DPD** regeneration is performed. (Refer to page **3-37**).

17. Display during **DPD** (Diesel Particulate Diffuser) regeneration

During automatic regeneration: Green
During manual regeneration: Yellow
Refer to page **3-37** for details.

18. Fuel economy display and **DTC** (Diagnostic Trouble Code) display
The time/fuel consumption at that time "gph" is displayed.
The **DTC** (Diagnostic Trouble Code) is displayed here.

19. Message screens

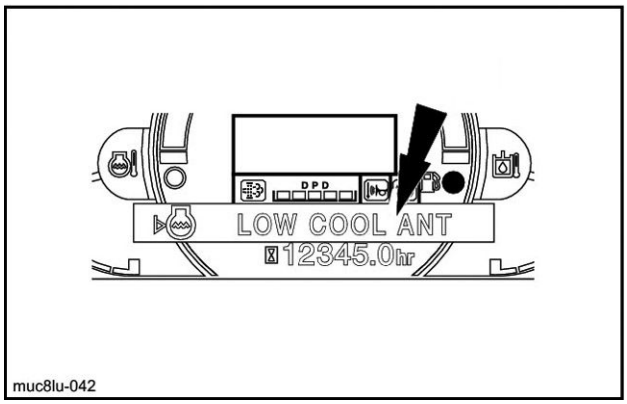

MUC8LU-042Z 4

This section of the display screen shows information icons and messages that change according to the set application of the machine.
An alarm also sounds when some of these messages are displayed.
The following section describes the icons, messages, and their corresponding explanations.

NOTICE: *If a message is displayed, perform maintenance according to the message.*

ATTENTION: *If the message is still displayed after maintenance, consult your CASE CONSTRUCTION Dealer.*

NOTE: *The language of the displayed messages can be changed, consult your CASE CONSTRUCTION Dealer.*

• Low oil pressure

Indicates that the engine oil level is low. An alarm sounds. Stop the engine and remove the ignition key, and then inspect the oil level.

NOTE: *If the measures above are not performed immediately when this message is displayed, the engine stops automatically.*

- Over heat

Indicates that the engine coolant temperature is high. An alarm sounds. Lower the engine speed. If the temperature does not go down, stop the engine and remove the ignition key. Wait for the temperature of the cooling system to go down, and then inspect the coolant level inside the reservoir tank and radiator. Check the radiator and oil cooler. (Refer to page **6-27**).

- Boost temp high

Indicates that the temperature of the turbocharger air that is being supplied to the engine is abnormally high. An alarm sounds. The engine automatically enters idling mode as a preventative measure. Stop the machine, operate the engine at idling speed, and wait until the message disappears. If the turbocharger air temperature on the display screen continues to rise, the engine stops automatically. Consult your CASE CONSTRUCTION Dealer.

- Alternator

Indicates that there is a problem in the alternator. An alarm sounds. Stop the engine and remove the ignition key, and then inspect the alternator. Consult your CASE CONSTRUCTION Dealer.

- Check engine

Indicates that there is a problem (short or disconnection) in the electrical system of the engine. An alarm sounds. Stop the engine and remove the ignition key, and then inspect the electrical system. Consult your CASE CONSTRUCTION Dealer.

- Elec. problem

Indicates that there is a problem in the electrical system. An alarm sounds. In this case, stop the engine and remove the ignition key, and then investigate the cause or consult your CASE CONSTRUCTION Dealer.

- Engine stop

Indicates that the emergency stop switch operated. An alarm sounds. To enable the engine to be started again, the switch must be canceled.

- Improper shut down

Perform low idling for at least 5 min. before stopping the engine.

- Check camera

Indicates that there is a problem (short or disconnection) in the monitor camera connection.

- Push **DPD** switch to activate

Press the **DPD** switch to regenerate **DPD**. (Refer to page **3-37**).

- Do not operate

Do not operate because the **DPD** is regenerating. (Refer to page **3-37**).

- Manual/Auto **DPD** re-gen

Now being manually or automatically regenerated. (Refer to page **3-37**).

- Over load

The load is excessive. Reduce the load.

- Low coolant

Indicates that there is insufficient coolant. An alarm sounds. Stop the engine and remove the ignition key. Wait for the temperature of the cooling system to go down, and then inspect the coolant level inside the reservoir tank and radiator. (Refer to page **6-27**).

- Air filter

Perform maintenance of the air cleaner filter.

- Low fuel

The fuel in the fuel tank is low. Fill the tank with fuel.

- Hyd oil filter

The hydraulic oil filter must be replaced.

- Fuel filter

The fuel filter must be replaced.

- Check flow rate

Check whether the flow is suitable for the attachment.

- Auxiliary set-up required

Displayed when an option line operation is performed but the option line mode is not selected correctly.

- Service due

Displayed when service is due for an oil filter. For details on the maintenance, see "Maintenance information" in the menu.

- Engine idling

Indicates that the engine is idling because engine idling is selected.

- Auto warm up

Indicates that auto warm up is operating.

- Idle shut down

Displayed before the engine is stopped with engine auto stop.

Monitor switches

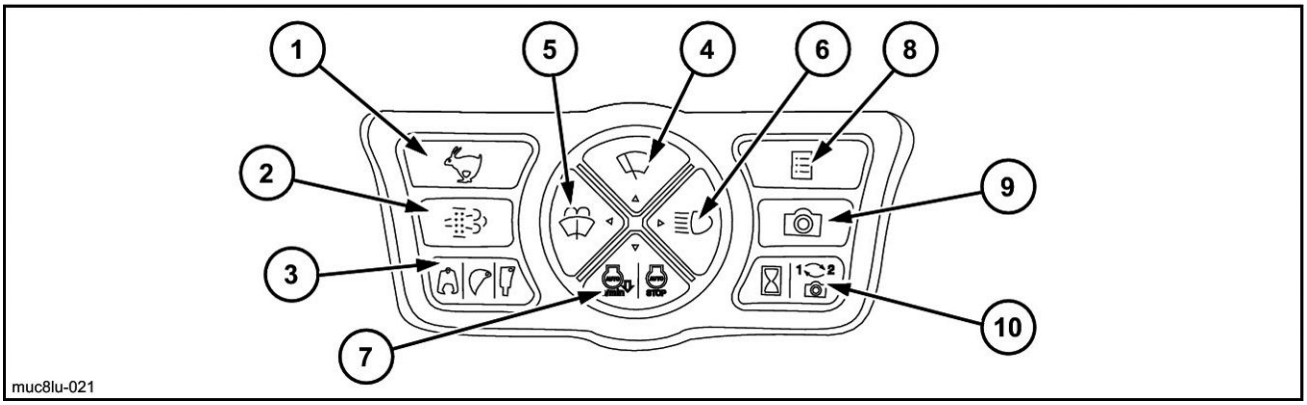

MUC8LU-021 1

1. Travel speed select switch
   Press this button switch to switch the travel speed from low speed **(I)** (turtle) to high speed **(II)** (rabbit).
   A "turtle" or "rabbit" is displayed on the monitor screen.

   ATTENTION: *Perform all changes to the travel speed while the machine is stopped. Otherwise, the travel direction may change.*

Low speed **(I)**: "turtle" **0 km/h** (**0.0 mph**) to **3.4 km/h** (**2.1 mph**).
Use for travel on sloped, uneven or soft ground.
High speed **(II)**: "rabbit" **0 km/h** (**0.0 mph**) to **5.6 km/h** (**3.5 mph**).
Use on good terrain that is hard and flat.

NOTE: *When the engine starts, the low speed is selected automatically.*

NOTE: *If the hydraulic pressure system enters an overload state while the high speed is selected on the machine, the speed is changed automatically to the low speed. As soon as the hydraulic pressure system recovers from the overload state, the speed returns to the high speed.*

2. **DPD** (Diesel Particulate Diffuser) Manual regeneration switch
   Press this switch to start **DPD** (Diesel Particulate Diffuser) manual regeneration. Press this switch if the "Push DPD switch to activate" message appears on the monitor. (Refer to page **3-37**).

   ATTENTION: *The temperature of the muffler and exhaust gas is high during **DPD** (Diesel Particulate Diffuser) regeneration. Be careful of burns and fire.*

3. Attachment select switch
   When using an optional attachment such as a breaker or crusher, press this switch to switch to a suitable flow and pressure.
   Switching to the registered patterns occurs if the switch is pressed.
   The selected attachment is displayed on the monitor screen.

   ATTENTION: *Before changing the attachment type, stop operation and set the machine in parking position.*

4. Front wiper switch
   This switch has 3 positions: **"Off"**, "Intermittent" and "Continuous".
   When the switch is pressed to operate the wipers intermittently, **(I)** is displayed on the monitor.
   When the switch is pressed again to operate the wipers continuously, **(II)** is displayed on the monitor.
   When the switch is pressed again to stop the wipers, **"Off"** is displayed on the monitor.

   NOTICE: *Do not operate the wipers when the front glass is dry. Doing so could damage the wipers.*

5. Windshield washer switch
   The windshield washer and wipers operate while this switch is pressed, and they stop when the switch is released.

   NOTICE: *Do not operate the washer when the reservoir is empty. Doing so could damage the electric pump.*

6. Working light switch
   Use this switch to turn the working light on or off.
   When the switch is pressed, the indicator and the working light turn on. Press again to turn them off.

7. Engine auto idling and auto stop switch
   Press this switch to switch between normal idling (switch on the right side control lever), auto idling, and auto stop.
   When this switch is pressed, an indicator is displayed on the monitor.

- In auto idling, **"Auto n/min"** is displayed, and in normal idling, the display turns off.
  If 5 sec. elapse without any operations while this position is selected, the engine transitions to the idling speed. (This interval can be lengthened. Consult your CASE CONSTRUCTION Dealer.)
  When a part such as the control lever or pedal is operated, the engine returns to its original speed.

- In auto stop, "Auto stop" is displayed.
  - Engine speed is 1200 rpm or less.
  "Idling" state

- If 3 min. elapse with the function cancellation lever closed and without changing the engine speed, "Idle shut down" is displayed on the monitor.
- About 10 sec. after "Idle shut down" is displayed, the engine stops.

NOTICE: *To protect the engine, at least 3 min. of idling is required.*

NOTE: *To restart the engine, first set the ignition key to **"Off"**, and then start the engine.*

- In auto idling and auto stop, **"Auto n/min"** and "Auto stop" are displayed.

NOTE: *If they are still selected when the engine is stopped, they will remain active when the engine is restarted.*

8. Menu screen display switch
   Press this switch to display the menu screen.
   The menu contains the following items.
   Language
   Brightness (day)
   Brightness (night)
   Fuel consumption indicator
   Maintenance information
   Clock adjust
   Auxiliary hydraulics
   Camera setting
   Use the switch shown in the diagram to select or a change a menu item.

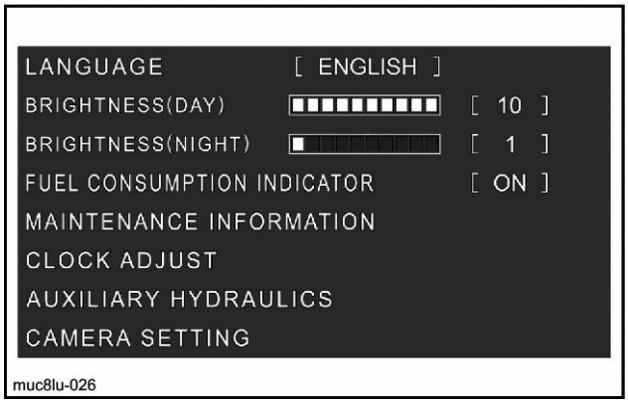

MUC8LU-026 2

   Refer to page **3-27** for use.

9. Camera display switch
   Press this button to switch between the machine information screen, machine information + camera joint display, and camera image independent display (mode, travel mode, clock and warning only).
   • Mode 1: Normal screen

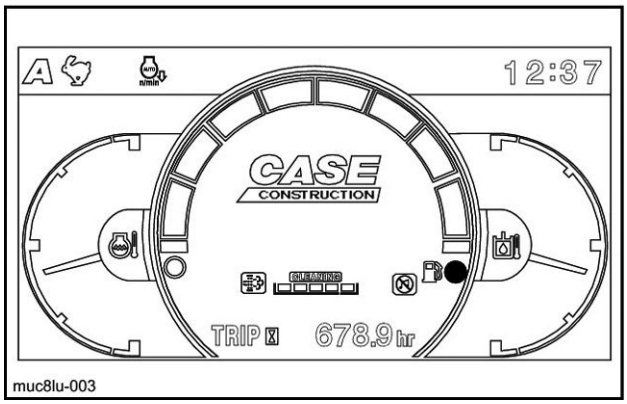

MUC8LU-003Z 3

   Machine information screen
   • Mode 2: Camera screen

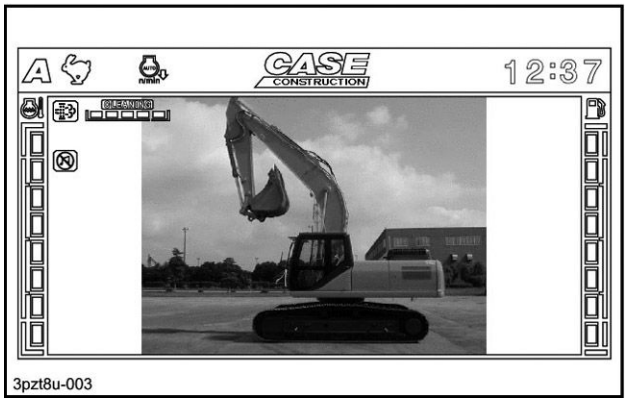

3PZT8U-003Z 4

   Machine information plus camera joint display
   • Mode 3: Camera screen without indicators

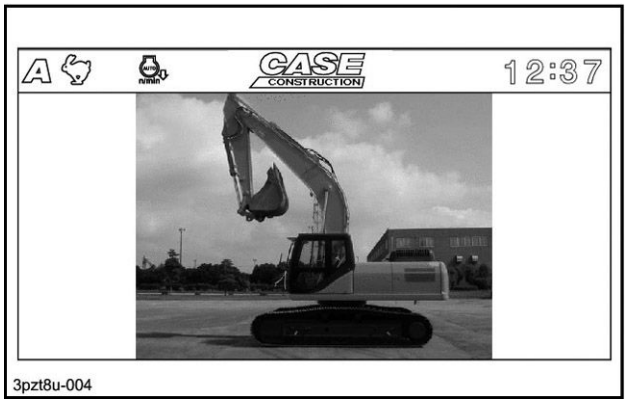

3PZT8U-004Z 5

   Camera image independent display (mode, travel mode, clock and warning only)
   The 3 types above are available for selection.

10. Hour meter select/back monitor select switch
    In the information screen, hour meter select is enabled.
    "Trip" control (partial hour meter)
    Used to calculate a specific operation time.
    Press the control to set the hour meter display to 0 and display the "Trip" message.
    Release the control.
    After about 1 min., the "Trip" display disappears and the normal hour meter display returns.
    To view the specific operation time, press the control and release it immediately.

To cancel the specific operation time, press and hold the control for about 2 sec.
The specific time display returns to 0.

NOTE: *If the key is switched **"Off"**, the hour meter goes out. If the hour meter button is pressed after the key is switched **"Off"**, only the hour meter will be displayed for 20 seconds.*

NOTE: *When a camera image is displayed, the camera image is switched each time the camera select switch is pressed. Refer to page **3-27**.*

Menu screen display

Menu display

Push button **(1)**.

GQ1BE4-004Z 1

Language

1. Push button **(1)** or **(2)**.
2. Select item "English" or another language.
3. Push button **(3)** to access the following menu.

If **(4)** is pressed, the display returns to the machine information screen (original screen).

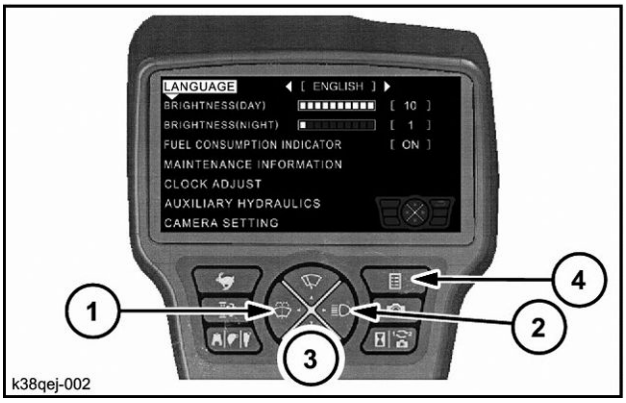

K38QEJ-002 2

Brightness (day)

1. Push button **(1)** or **(2)**.
2. Pushing button **(1)** is down level. Pushing button **(2)** is up level.
3. Push button **(3)** to access the following menu.

If **(4)** is pressed, the display returns to the machine information screen (original screen).

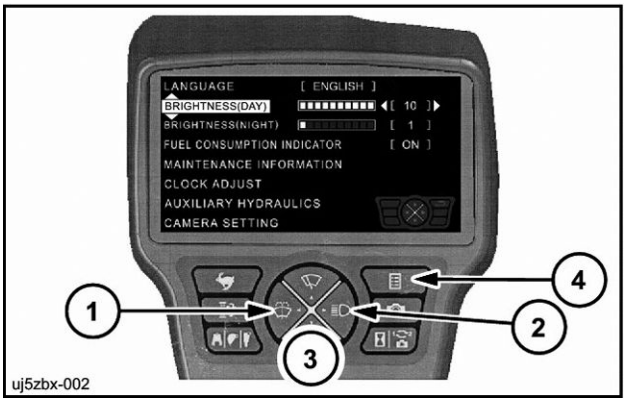

UJ5ZBX-002 3

Brightness (night)

1. Push button **(1)** or **(2)**.
2. Pushing button **(1)** is down level. Pushing button **(2)** is up level.
3. Push button **(3)** to access the following menu.

If **(4)** is pressed, the display returns to the machine information screen (original screen).

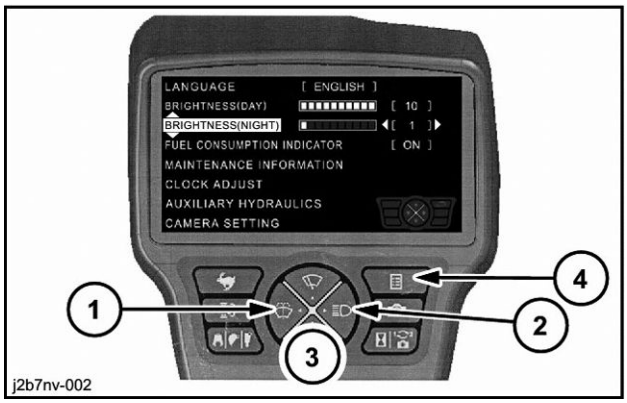

J2B7NV-002 4

Fuel consumption indicator

1. Push button **(1)** or **(2)**.
2. Select item **"On"** or **"Off"**.
3. Push button **(3)** to access the following menu.

If **(4)** is pressed, the display returns to the machine information screen (original screen).

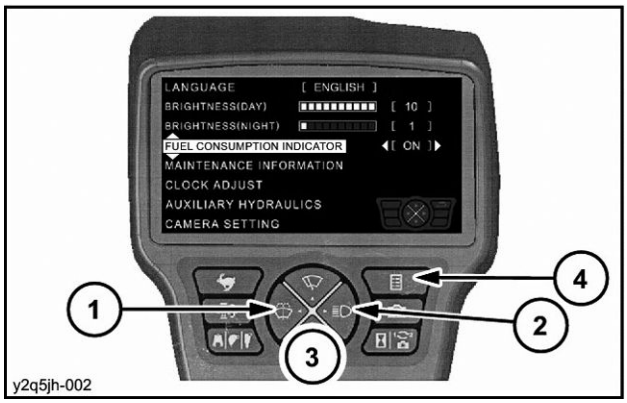

Y2Q5JH-002 5

Maintenance information

1. Push button **(3)** or **(4)**.
2. Select item of "Maintenance information".
3. Push button **(2)**.
4. Push button **(1)** or **(2)**.
5. Select page of 1 or 2 or 3.

Perform maintenance and reset the maintenance time.

1. Push button **(3)** or **(4)**.
2. Select item.
3. Long-push on button **(2)** to reset remaining time.

NOTE: *When the maintenance time is in the near future, the remaining time displays in yellow. When the maintenance time has passed, the remaining time displays in red.*

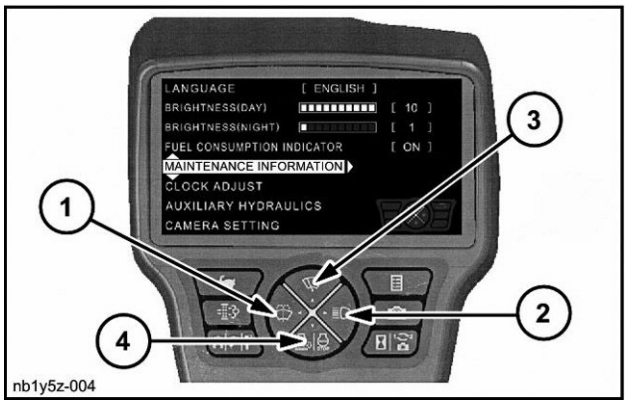

NB1Y5Z-004Z 6

If **(5)** is pressed, the display returns to the menu screen. If it is pressed one more time, the display returns to the machine information screen.

NB1Y5Z-005Z 7

Auxiliary hydraulics

Pattern 1

1. Push menu button **(1)**.

8KYGS8-001Z 8

2. Select "Auxiliary hydraulics".

8KYGS8-002 9

3. The auxiliary hydraulics screen is displayed by carrying out operations 1 and 2.

KS1YPB-002 10

Pattern 2

1. Long-push button **(1)**.
   Attachment select switch

KS1YPB-001Z 11

2. The auxiliary hydraulics screen is displayed by carrying out operation 1.

KS1YPB-002 12

Breaker or crusher selection

1. Push button **(3)** or **(4)** and select item "Attachment type".
2. Push button **(1)** or **(2)** and choose attachment type "Breaker" or "Crusher".

NOTE: *The display screen is different when a proportional valve is attached.*

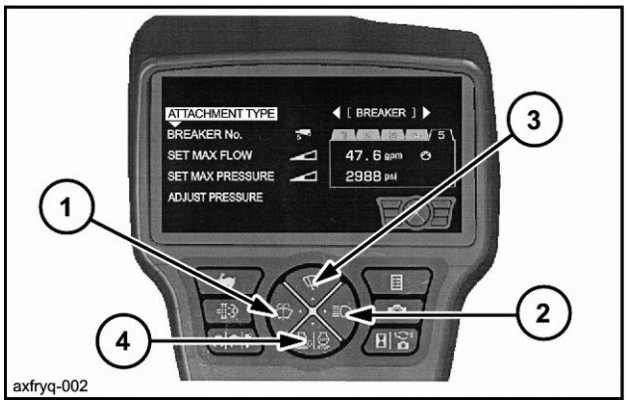

AXFRYQ-002 13

Breaker or crusher No.

1. Push button **(3)** or **(4)** and select item of "Breaker No" or "Crusher No".
2. Push button **(1)** or **(2)** and choose "Breaker No" or "Crusher No".
3. Push button **(1)** to move to left.
   Push button **(2)** to move to right.

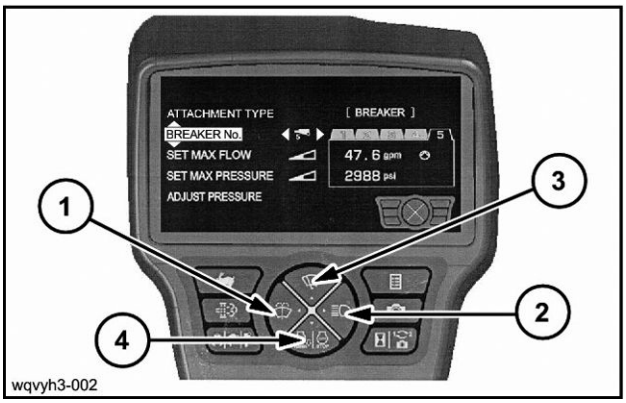

WQVYH3-002 14

Flow setting

1. Push button **(3)** or **(4)** and select item of "Set max flow".
2. Push button **(1)** or **(2)** and choose maximum number or flow.
3. Pushing button **(1)** is down number.
   Pushing button **(2)** is up number.

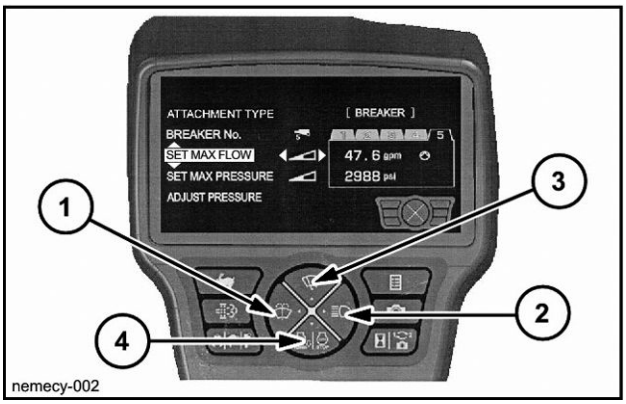

NEMECY-002 15

Pressure setting (if equipped)

1. Push button **(3)** or **(4)** and select item of "Set max pressure".
2. Push button **(1)** or **(2)** and choose maximum number of pressure.
3. Pushing button **(1)** is down number.
   Pushing button **(2)** is up number.

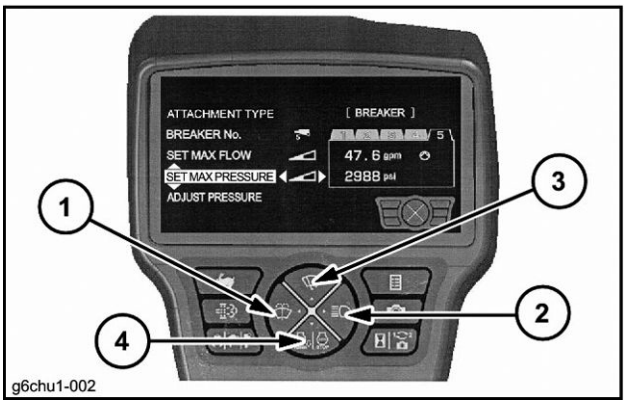

G6CHU1-002 16

Adjust pressure (if equipped)

If change valve of maximum flow or maximum pressure, system has to adjust the proportional relief solenoid valve.

1. Push button **(3)** or **(4)**.
2. Select item of “Adjust pressure” and push button **(4)**, then pressure adjustment screen is displayed.

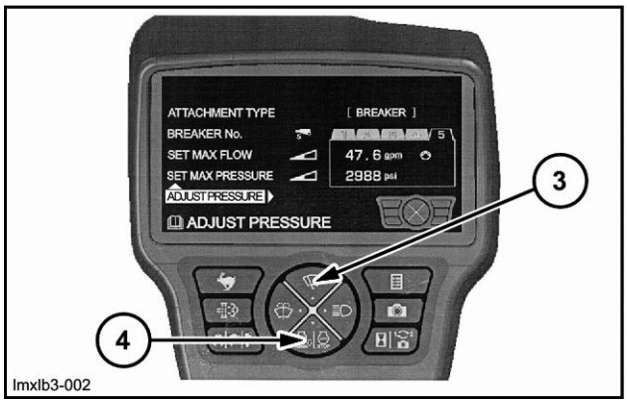

LMXLB3-002 17

When adjusting the pressure, depress the option pedal completely, or slide the proportional switch to maximum.
• If low flow and high pressure are selected, the adjustment setting may not input.
• If high flow and low pressure are selected, the adjustment setting may not input.

LMXLB3-009 18

Adjust pressure setting

1. Raise the oil temperature according to “Bringing the machine up to operating temperature”.

LMXLB3-003 19

2. Put the throttle volume in **“SP”** mode.

LMXLB3-004 20

3. Depress the option pedal for the breaker/crusher completely, or slide the proportional switch to maximum.

   NOTE: *Make adjustments before connecting to an attachment.*

LMXLB3-005 21

4. Hold the switch until “Pressure adjusting complete” is displayed on the screen.

LMXLB3-006 22

5. Operation complete.

LMXLB3-007 23

6. Returns automatically.

LMXLB3-008 24

Camera setting

Menu display/camera setting

1. Push button **(3)** or **(4)** and select item of "Camera setting".
2. Push button **(2)**.

NOTE: *A maximum of 3 cameras can be installed. Consult your CASE CONSTRUCTION Dealer if you would like to install an additional camera.*

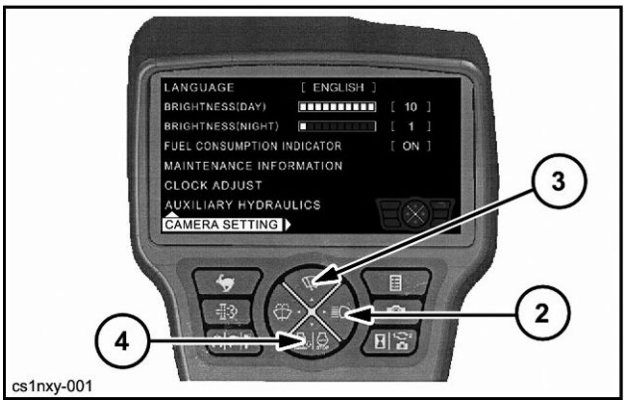

CS1NXY-001 25

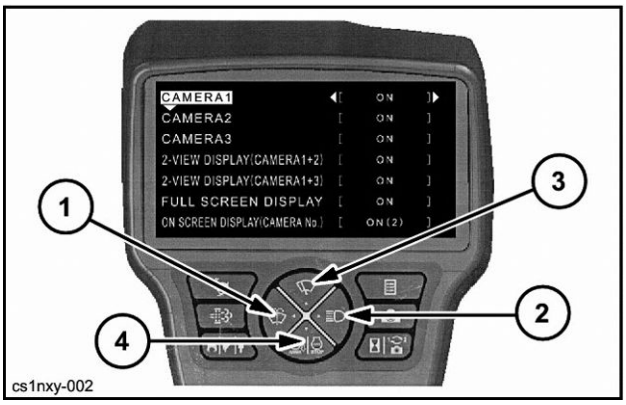

CS1NXY-002 26

Camera1

1. Push button **(3)** or **(4)**.
2. Select item Camera1”.
3. Push button **(1)** or **(2)**.
4. Select item **“On”** or "On:mirror view" or **“Off”**.

Camera2

1. Push button **(3)** or **(4)**.
2. Select item "Camera2".
3. Push button **(1)** or **(2)**.
4. Select item **“On”** or "On:mirror view" or **“Off”**.

Camera3

1. Push button **(3)** or **(4)**.
2. Select item "Camera3".
3. Push button **(1)** or **(2)**.
4. Select item **“On”** or "On:mirror view" or **“Off”**.

2–View display (Camera1+2)

1. Push button **(3)** or **(4)**.
2. Select item "2-View display (Camera1+2)".
3. Push button **(1)** or **(2)**.
4. Select item **“On”** or **“Off”**.

2-View display (CAMERA1+3)

1. Push button **(3)** or **(4)**.
2. Select item "2-View display (Camera1+3)".
3. Push button **(1)** or **(2)**.
4. Selrct item **“On”** or **“Off”**.

Full screen display

1. Push button **(3)** or **(4)**.
2. Select item "Full screen display".
3. Push button **(1)** or **(2)**.
4. Select item **“On”** or **“Off”**.

On screen display (Camera No.)

1. Push button **(3)** or **(4)**.
2. Select item "On screen display (Camera No.)".
3. Push button **(1)** or **(2)**.
4. Select item **“On (1)**" or **“On (2)**" or **“On (3)**" or **“Off”**.

Camera mode switch

The screen display switches each time the camera switching button **(1)** is pressed.

EH85RT-004Z 27

(1): Camera1
(2): Camera2
(3): Camera3

The pictures above display when all camera outputs are set to **"On"**.
There is a maximum of 5 types of screen displays.

NOTE: *When camera mode is using, the words* ***"Side"*** *(side camera) and/or* ***"Rear"*** *(rear camera) appear on the screen.*

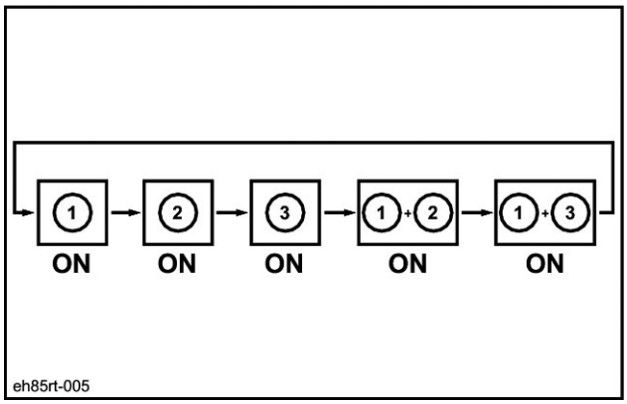

EH85RT-005 28

Diesel particulate diffuser (DPD)

The Diesel Particulate Diffuser purifies exhaust gas of particulate matter.
The diffuser collects particulate matter in a filter and combusts it automatically after a certain amount has been collected.
Be sure to observe the following to avoid problems with the Diesel Particulate Diffuser:

- White smoke may be produced during combustion.
- Do not regenerate the Diesel Particulate Diffuser in a badly ventilated room.
- Use genuine or the specified engine oil. (Refer to page **6-5**).
  Any other engine oil may cause problems with the engine and diffuser resulting in a malfunction.
- Use the specified standard fuel. (Refer to page **6-5**).
  Low-quality fuel, dewatering agent, and fuel additives may cause problems with the engine and diffuser resulting in a malfunction.
- When a certain amount of particulate matter has been collected in the filter, the diffuser combusts the particulate matter automatically.
  However, the diffuser cannot complete regeneration, depending on the work conditions.
  If regeneration is incomplete, an orange lamp will blink.
  Execute manual regeneration of the diffuser using the specified procedures.
  This does not imply any problems, but rather recovers the diffuser functions.
- The engine sound and hydraulic operation sound change during diffuser regeneration.
  It does not imply any problems.
- White smoke may be produced temporarily from the tailpipe as particulate matter combustion progresses during diffuser regeneration.
  It does not imply any problems.
  Do not execute regeneration in a poorly ventilated room.
- The smell of exhaust gas from the tailpipe is different from that of a normal diesel car.
  The different smell is the effect of the exhaust gas purification function.
- White smoke is produced if the engine is started when the ambient temperature is low and the engine is cool. The white smoke does not imply any problems.
- The time until completion of regeneration differs with the ambient temperature.
- Do not leave the machine unattended during regeneration.

ATTENTION: *The Diesel Particulate Diffuser, the exhaust pipe the tail pipe and the exhaust gas from the exhaust system are extremely hot while the engine is running, during Diesel Particulate Diffuser regeneration and immediately after driving. Be careful not to inadvertently touch them. Otherwise, you could get burned. Keep the machine away from any combustible object such as hay and paper dust.*

ATTENTION: *Be sure to stop the engine when you perform maintenance work to avoid getting burned.*

ATTENTION: *Be sure to close the engine hood properly. Otherwise, the exhaust gas generated during DPD regeneration melts the insulation and the other material inside the engine hood, causing damage to the machine*

NOTICE: *Do not modify the Diesel Particulate Diffuser and the exhaust system. Changing the orientation, length or diameter of the exhaust pipe would adversely affect the exhaust system's exhaust emission reduction function.*

Diesel Particulate Diffuser

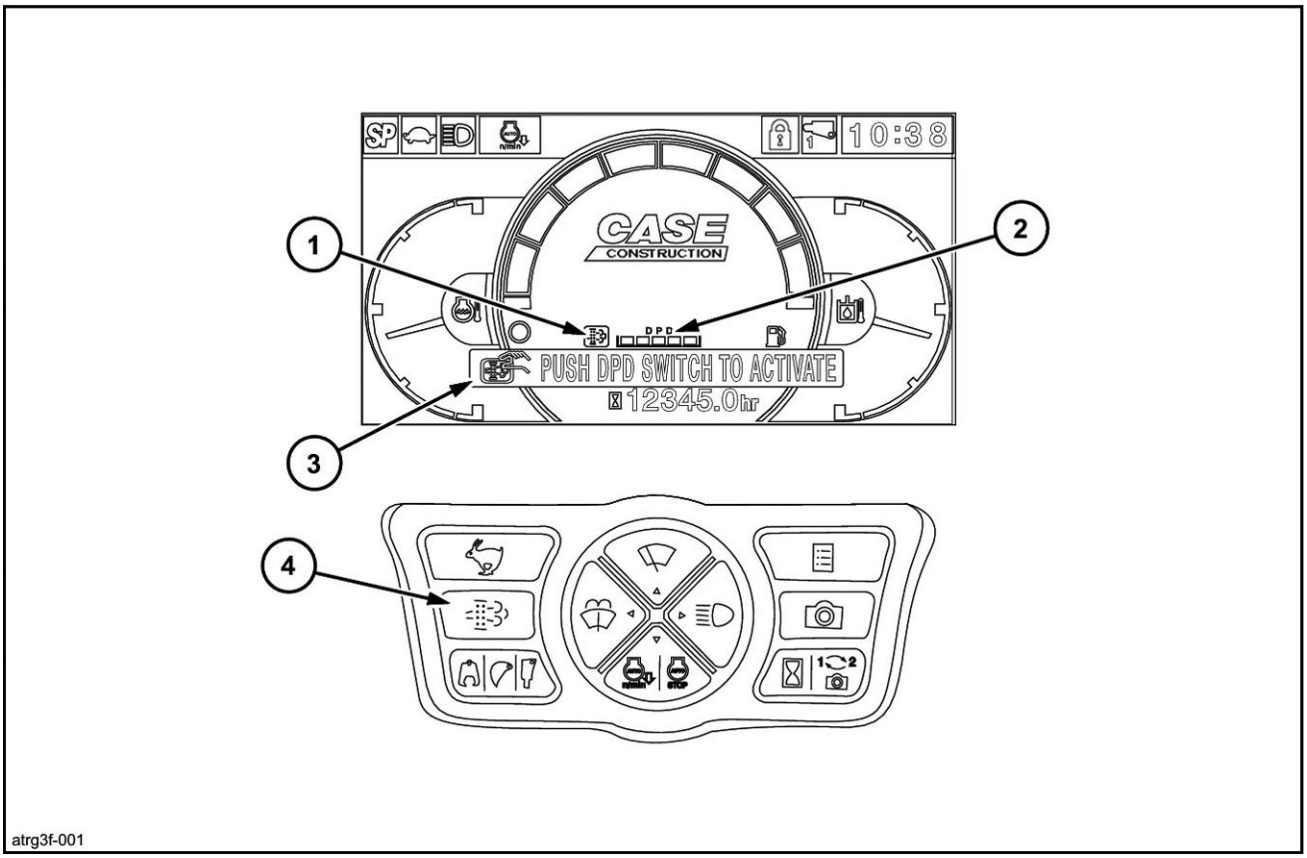

ATRG3F-001 1

1. Lamp

Normal operation: **Off**
Automatic regeneration: Green
Manual regeneration request: Blinking orange
Manual regeneration: Orange
DPD trouble: Red

2. Gauge

Normal operation: Collected particulate matter amount is indicated.
In automatic regeneration: Remaining regeneration time is displayed.
In manual regeneration: Remaining regeneration time is displayed.

3. Message

Displayed during automatic regeneration, manual regeneration and when a manual regeneration request is issued.

4. Switch

Used to start manual regeneration.

Automatic regeneration

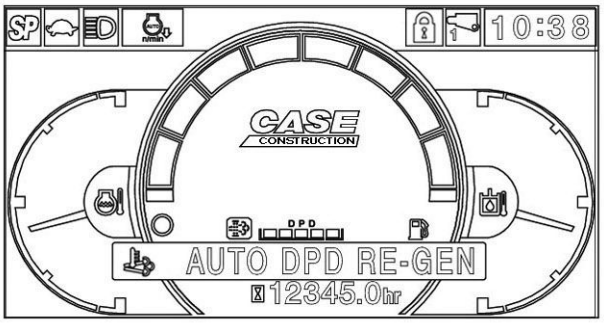

4FKEJV-001ZA 2

The machine may be operated normally during automatic regeneration.

- No switch operation is required.
- The engine sound changes during automatic regeneration.
  This does not imply any problems.
- If the machine is not used for a long time even though the engine is running, operation may change into manual regeneration, since automatic regeneration does not start or is not completed normally.
  Stop the engine if the machine is not used for a long time.

1. The gauge becomes full.
   Automatic regeneration starts.

- The green lamp is lit.
- The buzzer sounds for 2 seconds.
- The following message is displayed cyclically.

Auto **DPD** Re-gen

Minimum regeneration time: 8 minutes

NOTE: *The regeneration time will differ depending on the conditions.*

2. The gauge becomes zero.

- The lamp goes out.
- Automatic regeneration is complete.

Suspending automatic regeneration

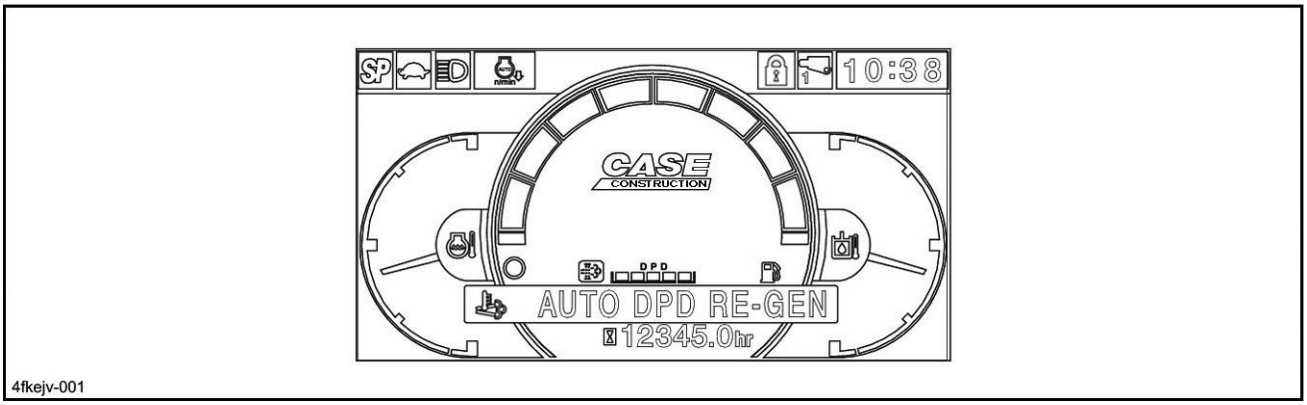

4FKEJV-001ZA 3

Automatic regeneration is suspended if the Diesel Particulate Diffuser switch is pressed during regeneration.
If the switch is held for 3 seconds or more during automatic regeneration, operation moves to optional manual regeneration. (The orange lamp blinks.)
Do not press the switch again if manual regeneration is not wanted.
The orange lamp goes out.
The diffuser may become faulty if operation is continued when automatic regeneration is suspended for a long time.
Move to a safe place as quickly as possible and execute regeneration. Operation changes to manual regeneration if automatic regeneration is suspended for a long time.

1. In automatic regeneration

- The green lamp is lit.
- The following message is displayed cyclically.

Auto **DPD** Re-gen

2. Carry out either of the following.

- Pressing the switch.

Push **DPD** switch to activate

3. Automatic regeneration is suspended.

- The green lamp goes out.
- The following message is displayed.

Push **DPD** switch to activate

4. Press the switch once to restart automatic regeneration.

- Automatic regeneration restarts within several seconds.

Automatic regeneration (necessity of cooling)

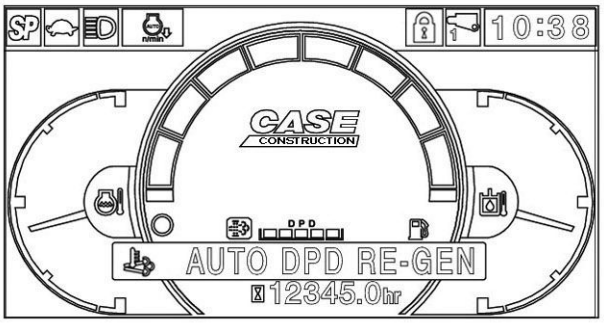

4FKEJV-001ZA 4

If the exhaust temperature (water temperature) is high, the Diesel Particulate Diffuser may be broken. Thus, automatic regeneration will not start.

When cooling is necessary:

- The green lamp blinks.
- The indicator blinks.
- The buzzer sounds for 2 seconds
- The following message is displayed.

Auto **DPD** Re-gen

Carry out either of the following if the lamp and the indicator blink.

1. Stop machine operation and carry out cooling.

When cooling is completed, the lamp and the indicator are lit.

After cooling is completed:

- The green lamp is lit.
- The indicator is lit.
- The buzzer sounds 2 seconds.
- The following message is displayed.

Auto **DPD** Re-gen

Automatic regeneration starts.

2. Press the switch to suspend automatic regeneration.

NOTE: *Automatic regeneration changes into manual regeneration if it is suspended for a long time.*

Press the switch.

- The green lamp goes off.
- The following message is displayed.

Push **DPD** switch to activate

Automatic regeneration is suspended.

Carry out cooling after completion of work.

Press the switch again to restart automatic regeneration.

- The green lamp is lit.
- The indicator is lit.
- The buzzer sounds 2 seconds.
- The following message is displayed.

Auto **DPD** Re-gen

Automatic regeneration starts.

Manual regeneration

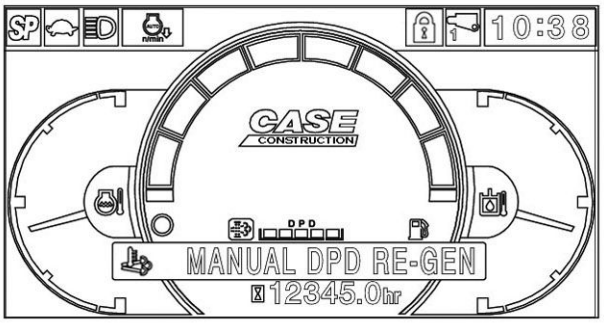

XNNFHF-001Z 5

Normal operation is disabled in manual regeneration.

When manual regeneration starts, engine revolutions are reduced automatically and the engine sound and hydraulic operation sound change.
These do not imply any problems.

If operation continues when the orange lamp blinks, the diffuser may be faulty.
Move to a safe place as quickly as possible and execute regeneration.

ATTENTION: *If the switch is not pressed for a long time, the orange lamp changes from slow to fast blinking. If the switch is not pressed at this time, the engine problem warning lamp goes on and the diffuser needs to be repaired.*

NOTE: *Consult your CASE CONSTRUCTION Dealer if a red* ***DPD*** *icon is displayed.*

Manual regeneration finishes earlier immediately after the machine runs than when the engine is cool.

The water temperature may rise during manual regeneration.

1. The orange lamp blinks.

- The buzzer sounds for 2 seconds.
- The following message is displayed.

Push **DPD** switch to activate

2. Move the machine to a safe place with no combustible objects.

- Set the function cancellation lever to the lock position (safety bar retracted).
- Press the switch.

3. Manual regeneration starts.

- The orange lamp is lit.
- The buzzer sounds for 2 seconds.
- The following messages are displayed cyclically.

Manual **DPD** Re-gen

Do not operate

Regeneration time: 20 to 25 minutes.

NOTE: *The regeneration time may differ depending on the conditions.*

4. The gauge becomes zero.

- The lamp goes out.
- Manual regeneration is complete.

Suspending manual regeneration

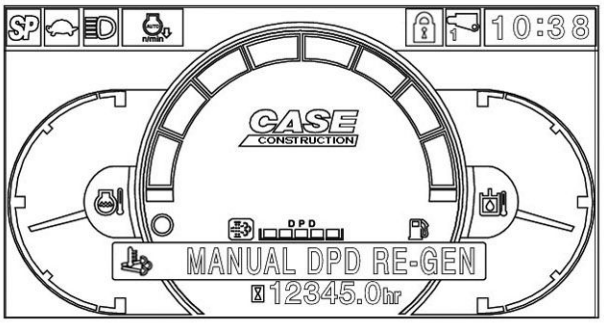

XNNFHF-001Z 6

Manual regeneration may be suspended at any time by executing one of the following:

- Setting the function cancellation lever to the unlock position (safety bar out).
- Operating the engine accaleration button.
- Pressing the switch.

If operation continues when manual regeneration stops for a long time, the diffuser may become faulty.
Move to a safe place as quickly as possible and execute regeneration.
If regeneration is suspended for a long time, the engine problem warning lamp goes on and the diffuser needs to be repaired.

1. In manual regeneration

- The orange lamp is lit.
- The following messages are displayed cyclically.

Manual **DPD** Re-gen

Do not operate

2. Carry out one of the following operations.

- Set the function cancellation lever to the unlock position (safety bar out).
- Operate the engine acceleration button.
- Press the switch.

3. Manual regeneration stops.

- The orange lamp blinks.
- The following message is displayed.

Push **DPD** switch to activate

4. Move the machine to a safe place with no combustible objects and retry manual regeneration.

Optional manual regeneration

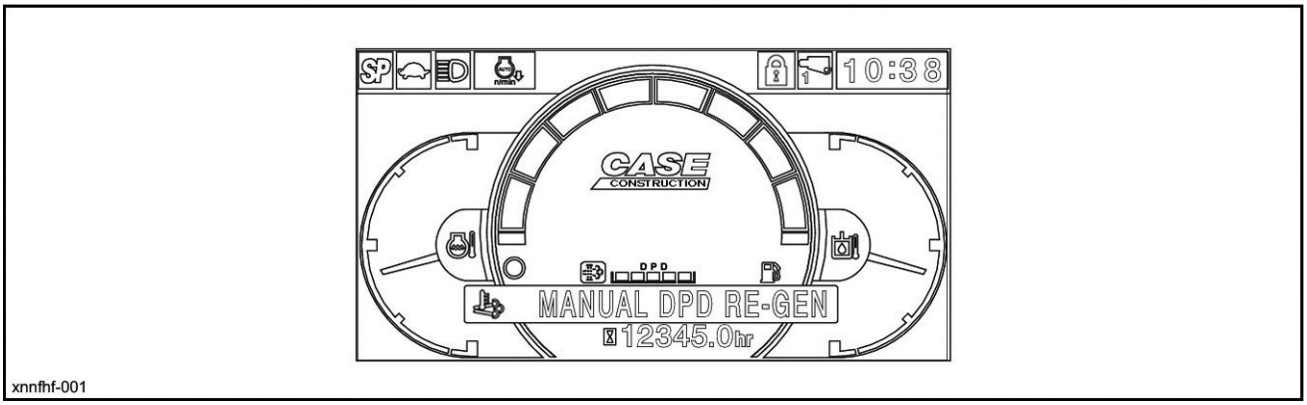

XNNFHF-001Z 7

If the machine is not used for a long time when the engine is operating in automatic regeneration, automatic regeneration may not start or complete normally.
In such a case, manual regeneration may be completed automatically by stopping automatic regeneration and executing optional manual regeneration.
Note that the machine cannot be operated in optional manual regeneration and the regeneration time takes longer.
When the switch is held for 3 seconds when automatic regeneration is stopped, the orange lamp blinks for 10 seconds and operation changes into manual regeneration.
When the switch is pressed again while the orange lamp is blinking, manual regeneration starts.
Do not press the switch if manual regeneration should not be started.
The blinking orange lamp goes out 10 seconds later.

1. In automatic regeneration.

- The green lamp is lit.
- The following message is displayed cyclically.

Auto **DPD** Re-gen

2. Pressing the switch.
3. Automatic regeneration stops.

- The green lamp goes out.
- The following message is displayed.

Push **DPD** switch to activate

4. Move the machine to a safe place with no combustible objects.

- Set the function cancellation lever to the lock position (safety bar retracted).

5. Hold the switch for 3 seconds to move to optional manual regeneration.
6. Moves to manual regeneration.

- The orange lamp blinks.
- The buzzer sounds for 2 seconds.
- The following message is displayed.

Push **DPD** switch to activate

7. Press the switch while the lamp is blinking (blinking lasts for 10 seconds).

NOTE: *If you do not need to perform manual regeneration, do not press the switch. The lamp will stop blinking and go out after 10 seconds. The following message is displayed again.*

Push **DPD** switch to activate

8. Manual regeneration starts.

- The orange lamp is lit.
- The buzzer sounds for 2 seconds.
- The following messages are displayed cyclically.

Manual **DPD** Re-gen

Do not operate

Regeneration time: 20 to 25 minutes.

9. Manual regeneration is complete.

- The gauge becomes zero.
- The lamp goes out.

Clock adjustment

1. Press the menu button **(1)** to display the menu screen.

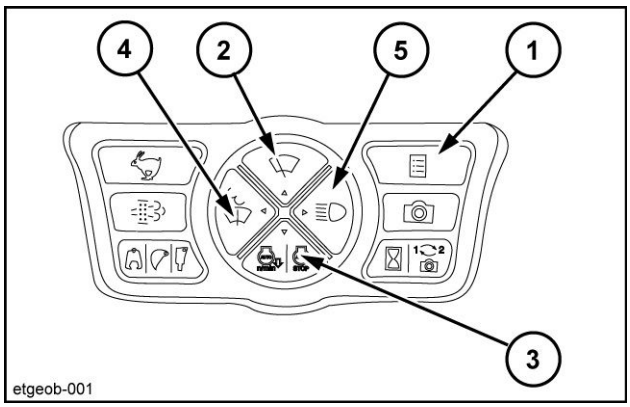

ETGEOB-001 1

2. Select "Clock adjust" in the menu screen by pressing buttons **(2)** to **(3)** and enter by pressing button **(5)**.

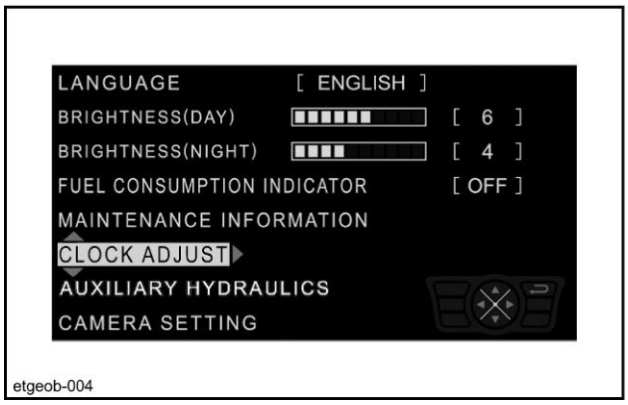

ETGE0B-004 2

3. Set the time on "Hour : Minutes" by pressing buttons **(2)** to **(3)** and **(4)** to **(5)** and return to the menu screen by pressing **(1)**.

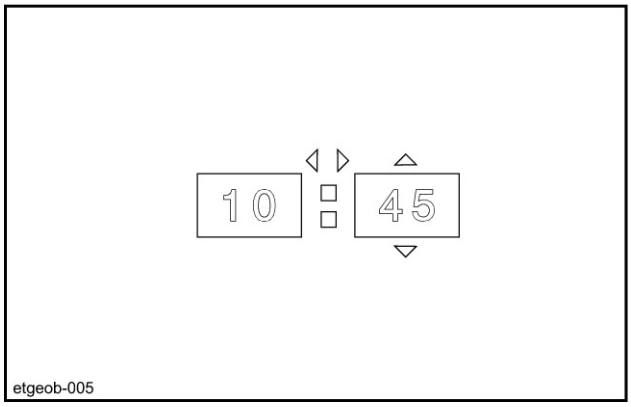

ETGEOB-005 3

LEFT-HAND SIDE CONTROLS

Left-hand control arm

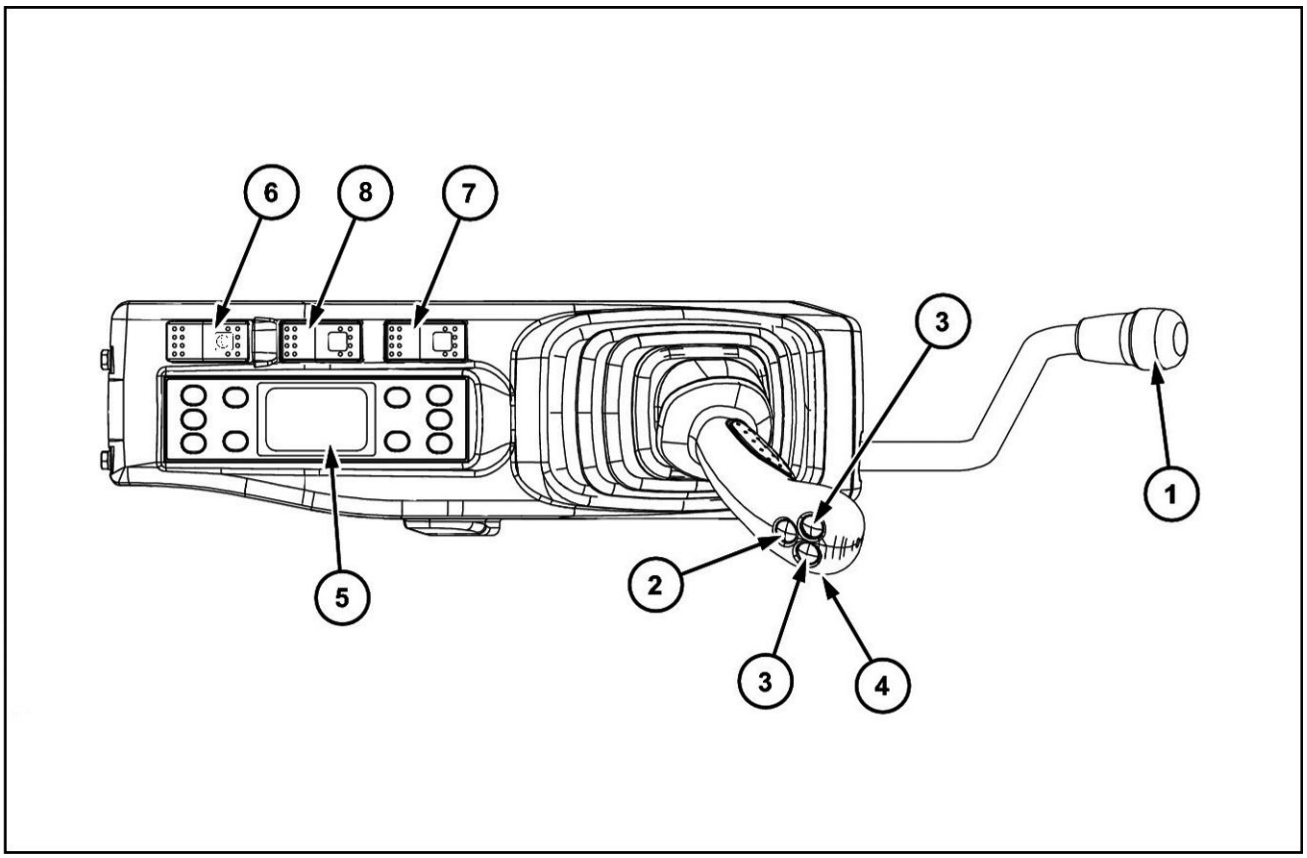

714DB4B6B 1

1. Function cancellation lever
   The shape of the function cancellation lever was designed to prevent the operator from leaving the operator's compartment without having raised the lever beforehand.
2. Horn
   To sound the horn, press the end of the left-hand control lever.

   NOTICE: *Always sound the horn before operating the machine.*
3. Option control (if equipped)
4. Cab radio mute control
   Located below the control lever, this control is used to mute the sound without having to operate the cab radio.
   Press and release the control to mute the sound.
   Press once again on the control and release, the sound is restored.

   NOTE: *With the engine stopped, if the sound is muted, it will still be active when the engine is restarted.*
5. Heating, ventilation or air conditioning control (Refer to page **3-52**)
6. Emergency shut down switch
   This control enables the engine to be shut down in emergency or when it is not possible to shut it down by means of the ignition key.
   Press on the front of the control, the engine stops, the audible warning device sounds, the control indicator lamp comes on and the message "Engine stop" is displayed, refer to page **3-19**.
   To start the engine again, press on the back of the control once more and then turn the ignition key to start the engine.

   NOTICE: *This switch should only be used in case of an emergency.*
7. Quick coupler locking and unlocking control switch (optional)
   (Refer to page **3-56**).
8. Free swing switch (optional)
   The switch to choose the swing stopping condition.
   In **"Off"** position the swing stops immediately.
   In **"On"** position the swing continues to turn slightly.

   NOTE: *When the engine is started, it is in the **"Off"** position.*

   NOTE: *When it is **"On"** and used on a slope, the swing becomes hard to stop. (The swing parking brake does not work automatically). If the switch is*

*turned **"On"** when on a slope, the machine may start to move because the swing brake is released.*

Proportional switch (if equipped)

This switch is used for optional accessories such as hydraulic breaker, if equipped, etc.
Consult your CASE CONSTRUCTION Dealer to select the optional accessory compatible with your machine and to correctly adjust the flow required for its use.

(1) = Proportional switch (Option control switch).
(2) = Option control switch
(3) = Horn switch

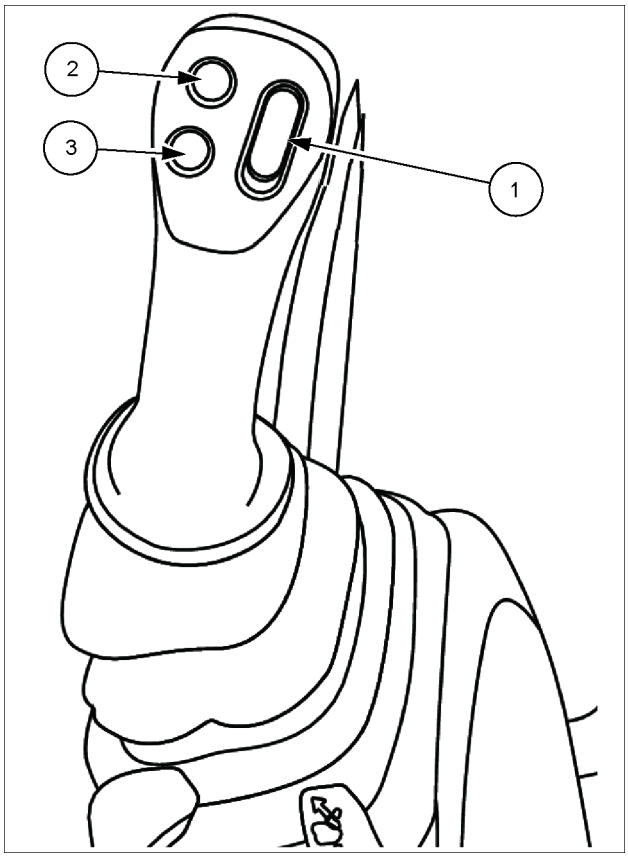

3208F2E6_TU 2

Function cancellation lever

⚠ WARNING

Unexpected machine movement!
Before leaving the operator's compartment, the function cancellation lever must be in the raised position.
Failure to comply could result in death or serious injury.

W1164A

The shape of the function cancellation lever **(1)** was designed to prevent the operator from leaving the operator's compartment without having raised the lever beforehand.
The function cancellation lever cancels the hydraulic controls.
In the raised position, all hydraulic controls are stopped.
In the lowered position, all hydraulic controls are operational.
The left hand control arm is raised along with the function cancellation lever for better access.

ATTENTION: *The engine must be started with the function cancellation lever in raised position. If the function cancellation lever is in lower position, it is not possible to start the engine.*

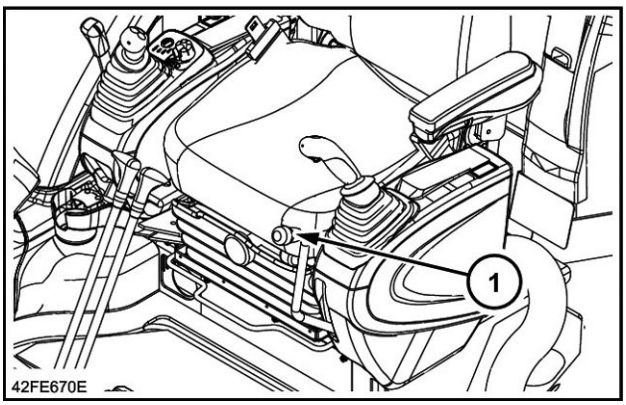

42FE670E 1

Heating, ventilation or air-conditioning control

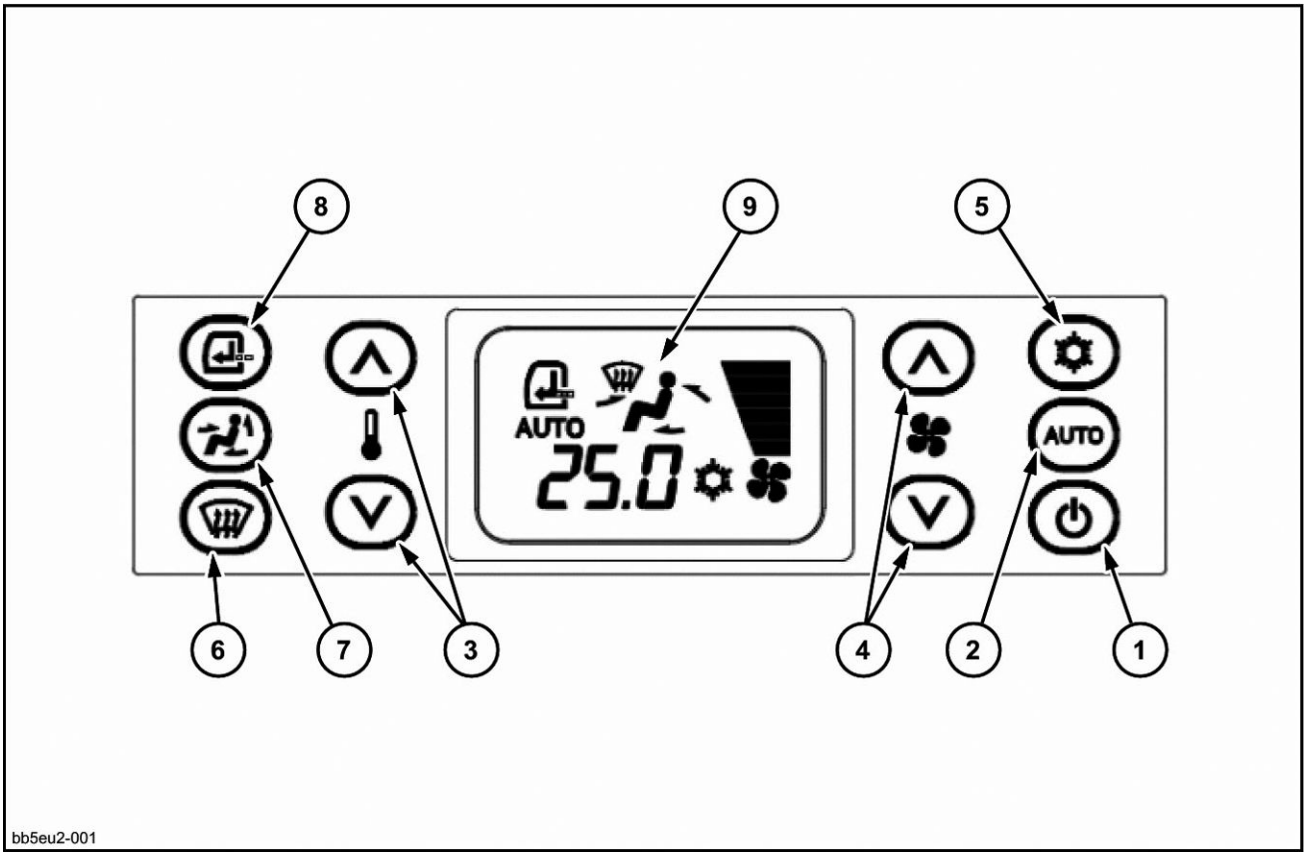

BB5EU2-001 1

1. **On/Off**
2. Automatic
3. Temperature
4. Ventilation
5. Air conditioning
6. Windshield defroster
7. Air flow direction
8. Air recycling
9. Display screen

On/Off

This push-button **(1)** is for turning the system **On** or **Off**.

NOTICE: *When the system is turned **On** it will operate at the same setting as the one selected previously.*

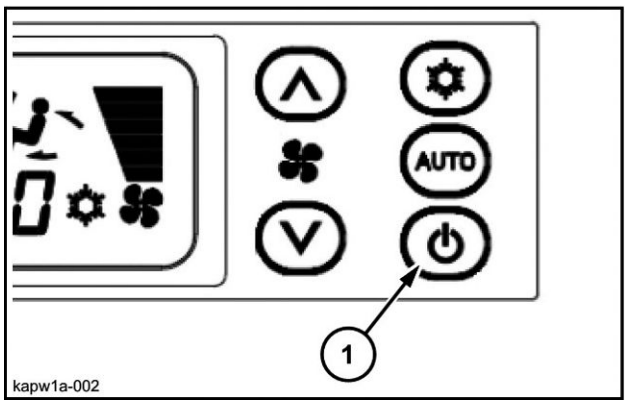

KAPW1A-002 2

Ventilation

These push buttons **(4)** enable the air flow to be increased or reduced. To increase the flow of air, press the top button. To decrease the flow of air, press the lower button. The segments on the display screen **(9)** will increase or decrease depending on the flow selected.

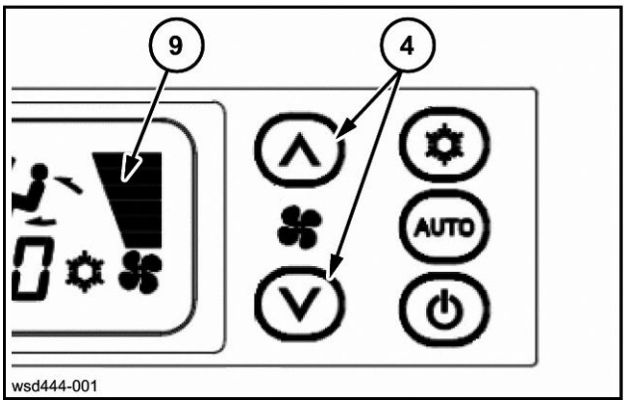

WSD444-001 3

Temperature

These push buttons **(3)** allow the temperature to be raised or lowered within an **18 °C** (**64.4 °F**) and **32 °C** (**89.6 °F**). To increase the temperature, press the up button. To lower the temperature, press the low button. The temperature reading will appear on the display screen **(9)**.

NOTICE: *The temperature reading can be displayed in degrees Celsius or degrees Fahrenheit. To select the scale required, press the two push buttons **(3)** simultaneously for five to ten seconds. The degrees Fahrenheit temperature will be followed by an "F".*

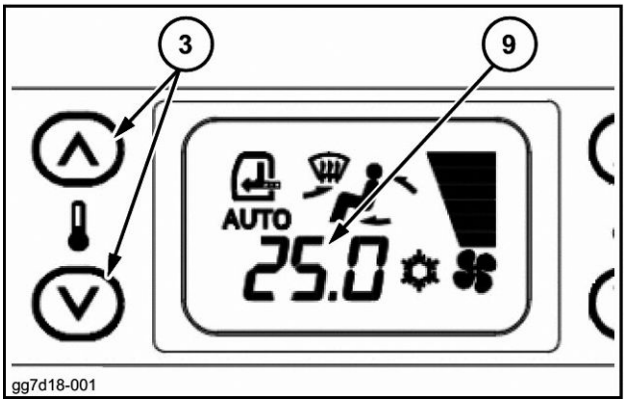

GG7D18-001 4

Air recycling

This button **(8)** allows for two different types of air circulation to be selected. Fresh air from outside or recycled air from inside. The type of circulation will be changed each time the button is pressed. Indication of the type of flow direction selected will appear on the display screen **(9)**.

(A) Internal air circulated

(B) External air enters

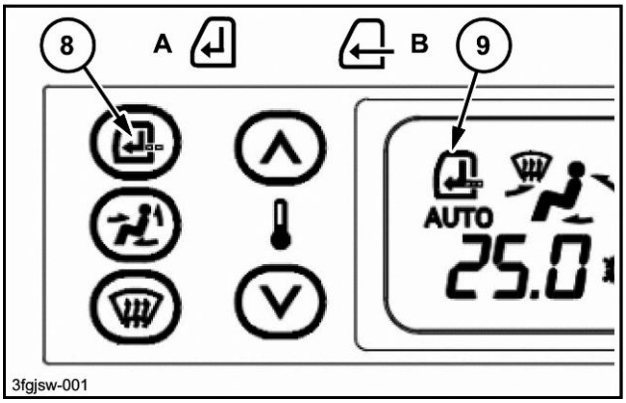

3FGJSW-001 5

Air flow direction

This button **(7)** allows four different types of air flow direction to be selected. To select the type of air flow direction, press the button **(7)** successively until the type of flow direction required is obtained. Indication of the type of flow direction selected will appear on the display screen **(9)**.

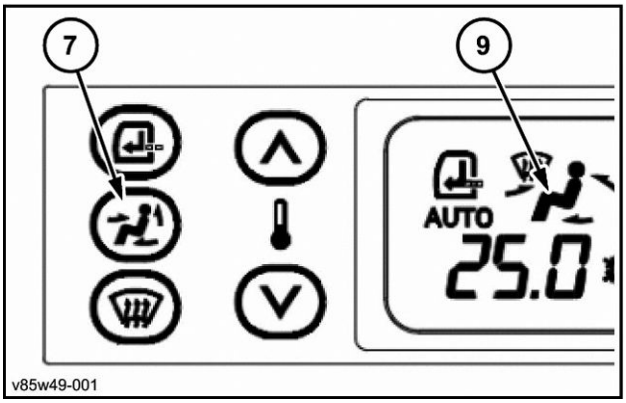

V85W49-001 6

(A) Upper front distribution.
(B) Upper rear distribution.
(C) High force upper distribution and low force rear distribution.
(D) Lower rear distribution (feet) and windshield.

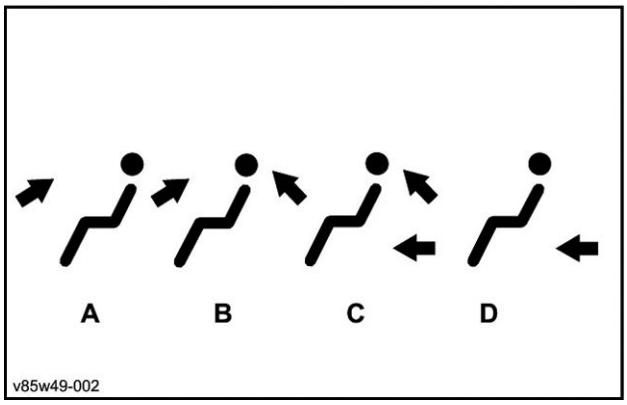

V85W49-002 7

Windshield defroster

This button **(6)** allows the windshield to be defrosted. Press the button to defrost the windshield. The display screen will show that the defroster is working **(9)**. To turn the defroster off, press the button again and the indication on the display screen will disappear.

NOTICE: *When this button is used, the control **(7)** is deactivated.*

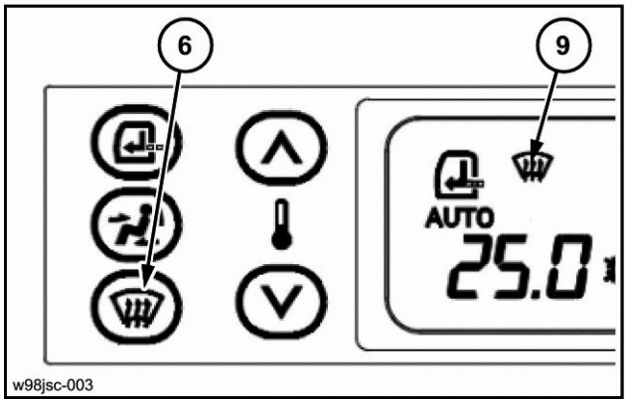

W98JSC-003 8

Air conditioning

ATTENTION: *When using the air conditioning, it is essential for all the operator's compartment windows, the windshield and the cab door to be kept closed. The air vents must be kept in open position.*

The air conditioning can be used in two different ways: manual or automatic air conditioning.

Manual:

This button **(5)** is used to turn the air conditioning on and off. When the air conditioning is running, confirmation is given on the display screen **(9)**. Manual adjustments can be made using controls **(3)**, **(4)**, **(7)** and **(8)**.

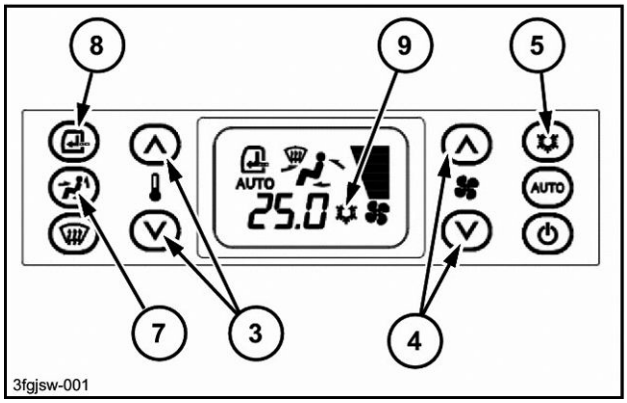

6CSC9W-001 9

Automatic:

This button **(2)** is used for automatic adjustment of the volume, the direction of flow and starting or stopping of the air conditioning. **"Auto"** will appear on the display screen **(9)**. In automatic mode, the only possible manual adjustment is to the temperature **(3)**.

If a control other than the temperature control is operated, the automatic mode will be cancelled and **"Auto"** will disappear from the display **(9)**. To stop the system, press buttons **(1)** or **(2)**.

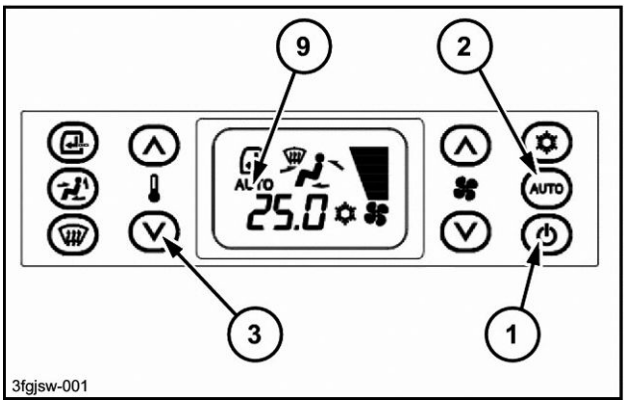

8TWEZ7-001 10

To obtain hot or cold air quickly:

Cold air: Quit the automatic mode by pressing button **(2)** then press button **(3)** down to the minimum temperature of **18 °C** (**64.4 °F**). Ventilation will be at maximum and cold air flow will come from the front.

Hot air: Quit the automatic mode by pressing button **(2)** then press button **(3A)** up to the maximum temperature of **32 °C** (**89.6 °F**). Ventilation will be at maximum and the flow of hot air will come from the rear at foot level.

NOTICE: *To ensure correct functioning and full effectiveness of the air conditioning system, it must be run at least once a week, even if only for a short time. For maintenance of the air conditioning circuit components, refer to page* ***6-73****.*

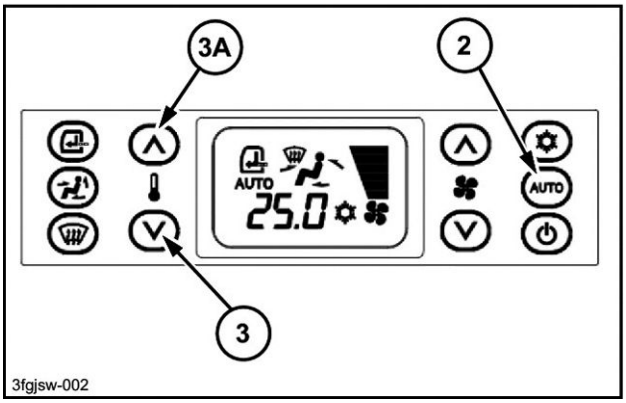

8TWEZ7-002 11

Emergency exit hammer

Located on the left-hand cab, use the hammer **(1)** to break the rear window, and then push the window strongly and escape outside.
Consult your CASE CONSTRUCTION dealer for window installation.

ATTENTION: *Do not break the rear window except when it is absolutely necessary, such as to escape in an emergency.*

ATTENTION: *Do not place anything in front of the window. Doing so may obstruct an emergency escape.*

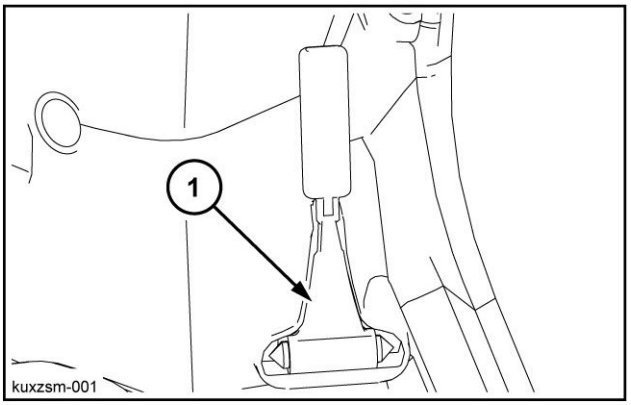

KUXZSM-001 1

Tool quick coupler locking and unlocking control switch (Optional)

This switch is located on the left-hand control arm.

To unlock pull the locking pin **(1)** towards you and simultaneously press the top of the switch. In this position, the audible alarm device sounds and the tool can be installed or removed.

NOTE: *For safety reasons, the switch cannot be operated by simply pressing the top.*

To lock, press the bottom of the switch. In this position, the audible alarm device will cease to function.

NOTE: *When locking, it is not necessary to operate the locking pin **(1)**.*

ATTENTION: *Each time you change a tool, be sure to place the switch in locked position.*

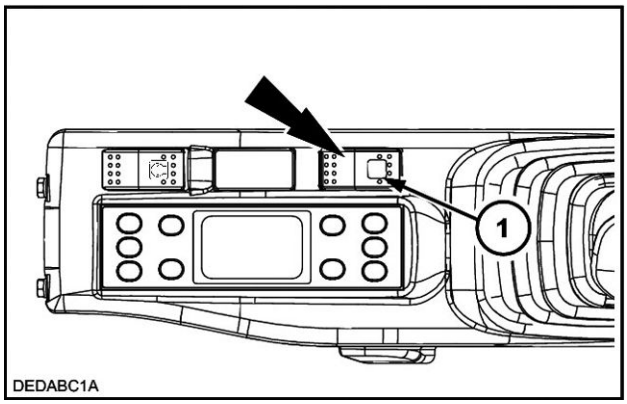

DEDABC1A 1

Sliding windows on door

When the locks are released, the windows can be opened and closed to the left or right as required.

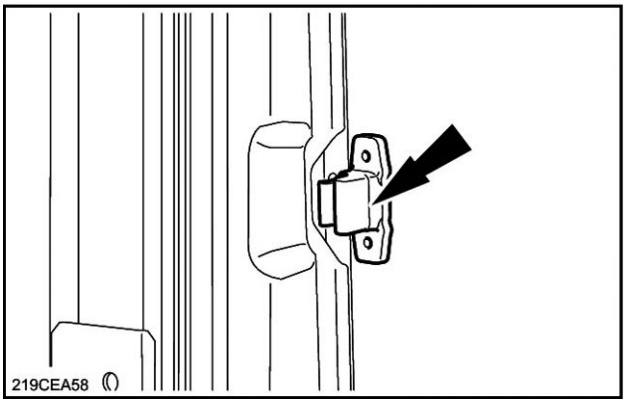

219CEA58 1

Magazine rack

Located on the left-hand side, behind the operator's seat.

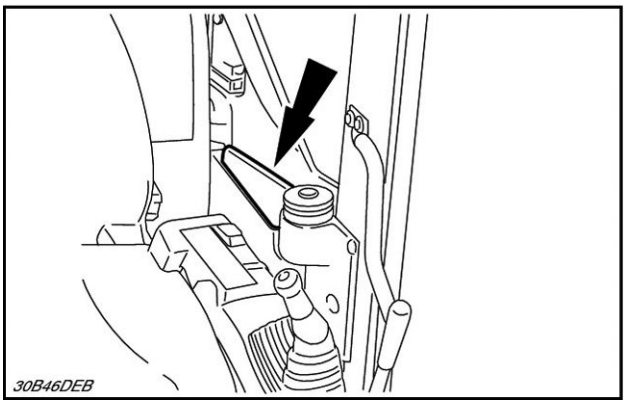

30B46DEB 1

Coat hanger hook

The hook is on the rear left-hand cab upright.

NOTICE: *Take care not to obscure the view with clothes that are too bulky.*

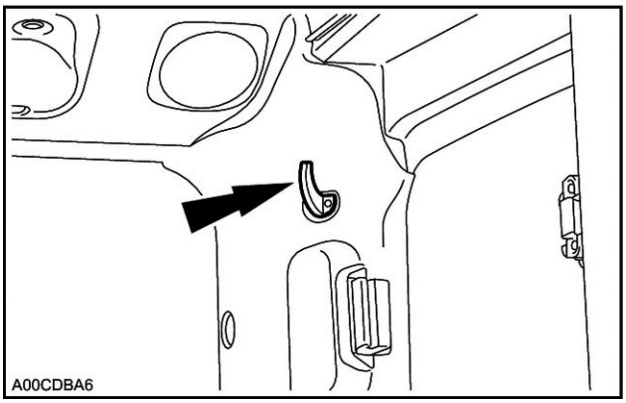

A00CDBA6 1

RIGHT-HAND SIDE CONTROLS

Right-hand control arm

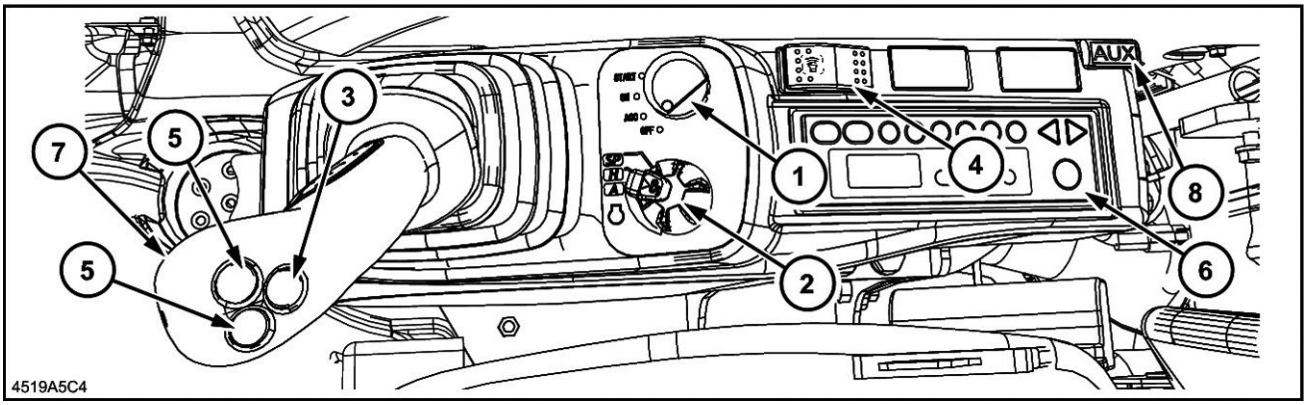

4519A5C4 1

1. Ignition switch
   This switch has four positions, **"On"** (contact), **"Start"** (engine ignition), **"Off"** (engine shut-down) and **"Acc"** (accessory current supply).

   NOTICE: *When the ignition key is in **"On"** (contact) position, if the anti-theft protection has been programmed, then it will be necessary to enter the code. The message "Password" will be displayed. (Refer to page **4-4**).*

   NOTE: *This key is also used to lock the cab door, the engine hood, the front storage compartment, the side doors and the fuel tank cap.*

2. Engine acceleration button and working mode selector
   This button enables an increase or reduction in the engine speed.
   This button is coupled with the three working mode selector.
   Mode **"A"** (automatic) when the energy output has priority.
   In this mode, the balance between the speed and energy output is controlled for each movement of the controls.
   Mode **"H"** for difficult excavation work or if the load increases, and mode **"SP"** when the output has priority.
   Each selected mode **(A**, **H** or **SP)** is displayed on the screen.

   NOTE: *To select the **"SP"** mode, operate the indexing pin while rotating the acceleration button to the right.*

   NOTE: *If there is no change in engine speed, press and release the engine automatic idle speed selector.*

3. Engine idle speed selector
   This control enables automatic engine idle without operating the throttle button.
   To select idle speed, press and release the control for the engine automatically to go into idle speed; the "Engine idling" icon will appear on the message screens. When the control is pressed and released once more the engine will revert to its original speed and the icon on the systems display panel will disappear.

4. Travel caution alarm switch
   "Cont" position the alarm sounds when the travel controls are actuated.
   "Auto off" position, when the travel control are actuated, the alarm sounds for 10 seconds and then stop.

5. Option control (if equipped)

6. Cab radio
   To operate the cab radio. (Refer to page **3-60**).

7. Wiper switch
   When the switch is pressed, the wiper moves.

8. Radio auxiliary input port
   This radio provided auxiliary input jack so that portable audio products can be connected.

Proportional switch (if equipped)

This switch is used for optional accessories such as hydraulic breaker, if equipped, etc.
Consult your CASE CONSTRUCTION Dealer to select the optional accessory compatible with your machine and to correctly adjust the flow required for its use.

(9) = Proportional switch (Option control switch).
(10) = Option control switch
(11) = Engine idle switch

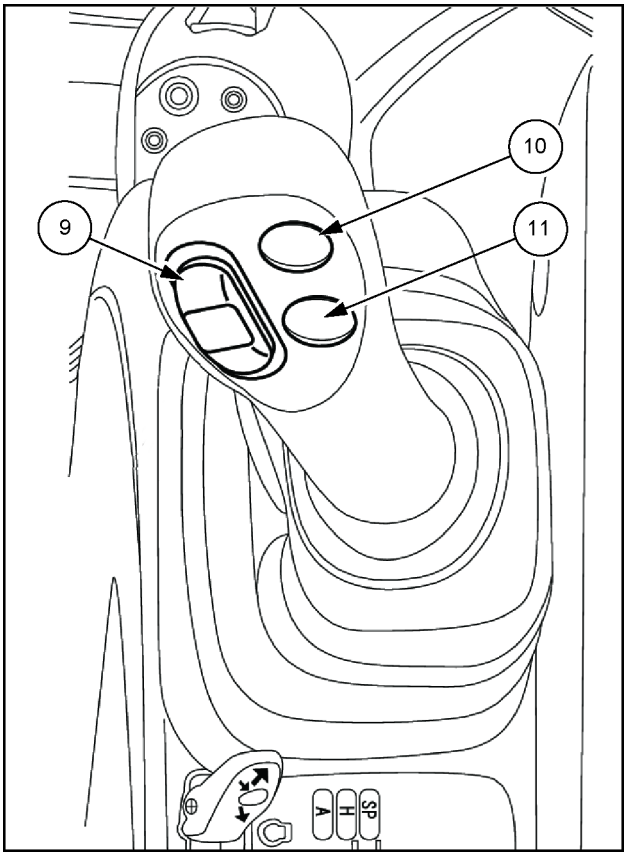

EC33398B_TU_14N 2

Cab radio

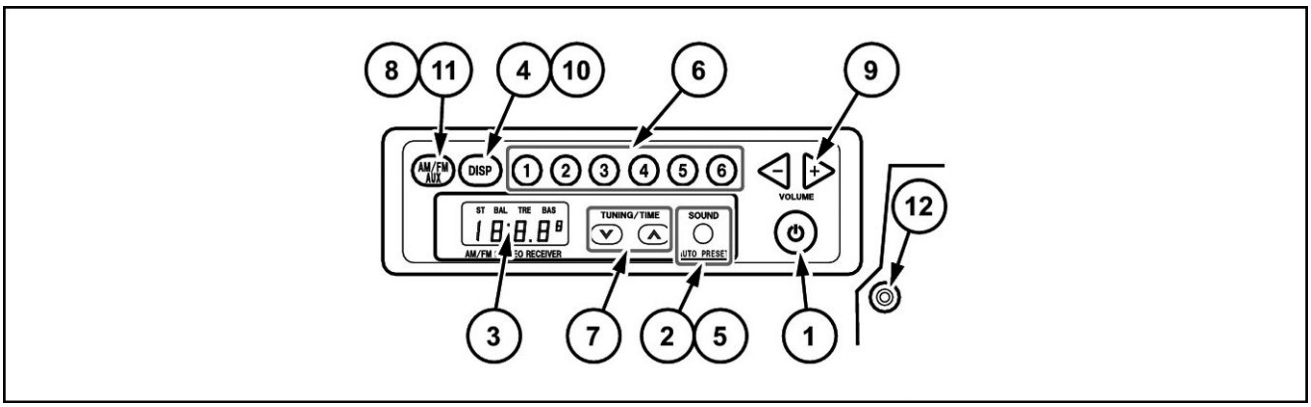

L7XJ42-001A 1

1. Power button **(Power)**
   Pressing **Power** button turns **ON** the power. The band name is displayed followed by the frequency. Pressing it again turns **OFF** the power. Clock is displayed.

2. Sound adjustment **(SOUND)**
   Pressing this button switches between **BAL** and **TRE** and **BAS**.
   Pressing the button with **BAS** selected cancels the sound adjustment.

- Pressing the tuning buttons with **BAL** (balance) selected allows you to make adjustments. Pressing the up button **(7)** raises the output level of the right speaker. Pressing the down button **(7)** lower the output level of the left speaker. (Output levels of both speakers go up to 7).
- Pressing the tuning buttons with **TRE** (treble) selected allows you to make adjustments. Pressing the up button **(7)** raises the level by one step. Pressing down button **(7)** lowers the level by one step. (The levels go up and down up to 7).
- Pressing the tuning buttons with **BAS** (bass) selected allows you to make adjustments. Pressing the up **(7)** button raises the level by one step. Pressing down button **(7)** lowers the level by one step.

3. Display unit
   The clock, radio frequency, and operation mode are displayed.

4. Clock/Frequency button **(DISP)**
   Pressing this button switches the display to the clock. Pressing it again displays the band.
   If you leave the display alone, it returns to the frequency display after 1.5 seconds.

5. Auto store **(SOUND/AUTO PRESET)**
   When this button is held down for at least 2 seconds, receivable broadcast stations can be memorized for preset buttons 1 through 6.

6. Preset buttons 1 through 6 (Preset station)
   One **FM1** , one **FM2** , and one **AM** station can be preset for each button.
   If you long push the desired number of the preset keys (1 to 6) with the radio **ON**, the receiving frequency is registered with the number selected.
   The preset display flashes 3 times and then the frequency display lights up.

7. Tuning button **(TUNE)**
   When **TUNE** button is held down for at least one second, the radio begins to search automatically for a receivable station and stops when it finds a station. To stop this search midway, press this button again.
   Pressing the up button increases the frequency. Pressing the down button lowers the frequency.
   Holding down either button changes the frequency continuously.

8. Band button **(AM/FM, AUX)**
   Pressing this button switches the band between **FM1, FM2** and **AM**. The reception band is displayed on the display.

9. Volume adjustment buttons **(VOLUME-, VOLUME+)**
   Pressing **VOLUME-** button lower the volume. Pressing the **VOLUME+** button raises the volume.
   Holding down either button changes the volume continuously.

10. Clock adjustment **(DISP)**
    Pressing **DISP** button for at least one second with the clock display selected allows you to adjust the clock. Pressing the **DISP** button switches between hours and minutes adjustments.
    Pressing this button again cancels the clock adjustment.

- Hours adjustment
  Pressing the tuning buttons while hours section is flashing allows you to make adjustments.
  Pressing the up button **(7)** moves the time forwards. Pressing down button **(7)** moves the time backwards.

- Minutes adjustment
  Pressing the tuning buttons while minutes section is flashing allows you to make adjustments.
  Pressing the up button **(7)** moves the time forwards. Pressing down button **(7)** moves the time backwards.

11. External input switch button **(AUX)**
    Pressing **AM, FM** and **AUX** buttons for at least one second switches from the radio you are currently listening to the input connected to the external input jack **(12)** and displays **AUX** on the display. Pressing it again returns to the original radio reception.

12. External input jack **(AUX IN)** vehicle; Body side
    When using this jack, use any commercially-available stereo mini-plug cord (D3.5) to plug it to the headphone terminal of your portable audio device or the like.

Listen to the radio

1. Turn **ON ACC** switch to **ON** position and press Power button.
2. Select desired band **MW** or **AM** by band switch.
3. Select desired frequency by presest button or tuning buttons.
4. Adjust desired volume level by **VOLUME+** or **VOLUME-** down buttons.
5. Press Tone button, if higher sound is not desired.
6. To turn off the radio, press Power button.

Manual tuning

Pressing either tuning buttons shifts the receiving frequency by step.

Seek tuning

Pressing either of the tuning button more than 3 seconds, Seek function will start and find next available station and then stop at the frequency.

Presetting desired station into memory

Select desired band **FM** or **AM**.
The tune-in desired station by Seek tuning or Manual tuning.
Press desired number 1 to 6 of button more than 3 seconds, display will indicate the channel number and finish the preset operation.

NOTE: *If either of the preset buttons pressed more than 2 seconds while cannel number is not indicated on the display, preset frequency of the specific memory will be changed.*
In case battery back-up line is cut off due to replacing battery or any other reason, previously stored memories will be erased and the presetting procedure should be done again.
*The radio is capable to store 6 stations of **FM** and 6 stations of **AM**.*

Auto store memory

During radio mode, pressing this button and release will automatically scan the current band and store available stations to preset memory 1 to 6.

ATTENTION: *The operation of Auto Store Memory will erase previously memorized stations. In case, not stored in stored in desired preset button, please follow manual presetting.*

AUX Audio connection

This radio provided **AUX** input jack so that portable audio products can be connected.
Be sure to use **3.5 mm** (**0.1 in**) stereo mini-plug for the external input jack.
Pressing **AUX** button will change over between radio function and **AUX** function.
During **AUX** mode, **AUX** will be indicated on the display.
The volume control of portable audio products should be adjusted approximately same as currently listening radio sound volume.
Then the sound volume can be adjusted by volume control of this radio.
Please do not connect higher output sources than portable audio headphone output.

Time set

Press Clock button and indicate clock on display.
Pressing Tune-up button to adjust minutes and pressing Tune-down Button to adjust hours.

NOTE: *Battely back-up models do not have clock function and the button is disabled.*

Reset function

If the frequency display is wrong or switching is not possible, reset the unit. While pressing **AUX** button, press **VOLUME+** and **VOLUME-** buttons at the same time resets the unit. ("0" is displayed for a moment, then the unit is reset.) The clock and the preset stations are also reset..
When the wires are disconnected, the preset stations are retained in memory.

Clearing memory

If the connection to the battery is cut off by turning the battery connect switch key to **"O"** (OFF position), performing maintenance for the machine, or removing the radio, the stations stored on the radio presets will be all cleared in a few days. If so, set the stations again.

Right-hand console

1. Storage tray
2. Horn volume control
   Pressing this key toggles the horn alternately between normal volume and reduced volume.

   NOTE: *When the engine is restarted, the volume selected before shutting down the engine remains unchanged.*
3. Auxiliary 12 volts socket
   This socket is used to power electrical equipment of 12 volts.

   NOTICE: *It is strictly prohibited to connect devices of a different voltage.*
4. Option control (optional)

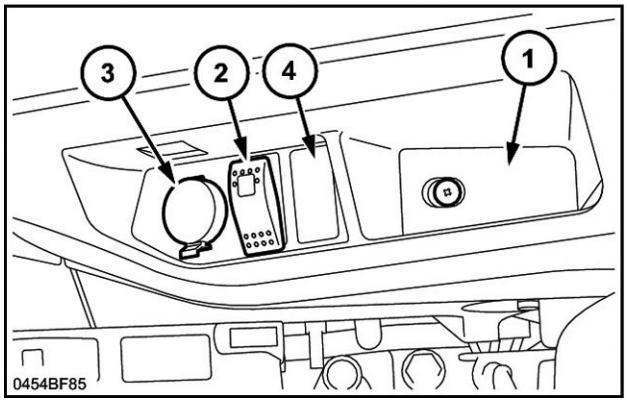

0454BF85A 1

Cup holder

Located on the front right-hand side of the operator's seat, the cap holder is designed to hold a beverage container.

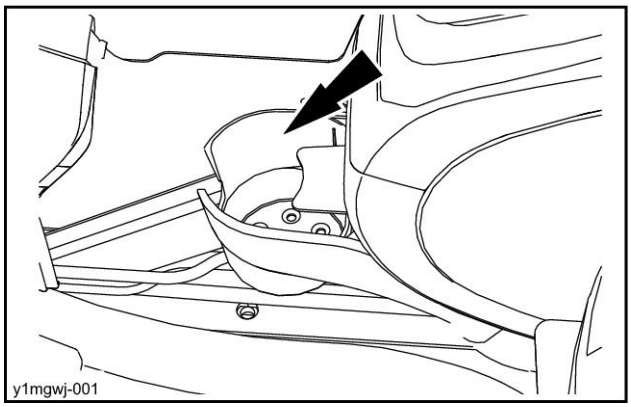

Y1MGWJ-001A 1

Dozer blade control lever (standard machine only)

⚠ WARNING

Hazard to bystanders!
ALWAYS make sure the work area is clear of bystanders and domestic animals before starting this procedure. Know the full area of movement of the machine. Do not permit anyone to enter the area of movement during this procedure.
Failure to comply could result in death or serious injury.

W0245A

This lever is used to operate the dozer blade.

- Pull the lever, the dozer blade rises.
- Push the lever, the dozer blade lowers.

The operation of the dozer blade stops when the lever is released. The lever returns to the neutral position.

NOTE: *With the engine stopped, if the dozer blade is in raised position, it is still possible to lower it using the lever until it touches the ground.*

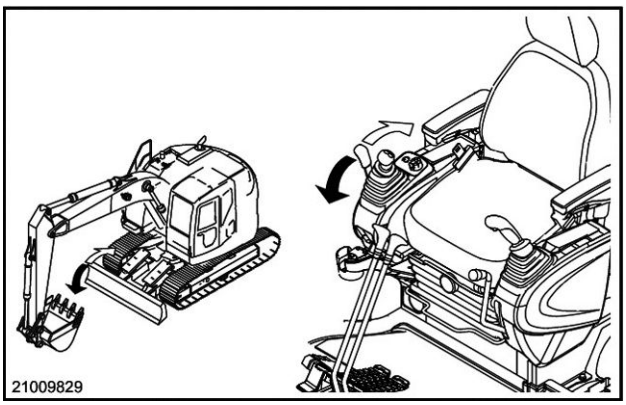

21009829 1

REARWARD CONTROLS

Fuse box

Located on the left-hand site, behind the operator's seat.

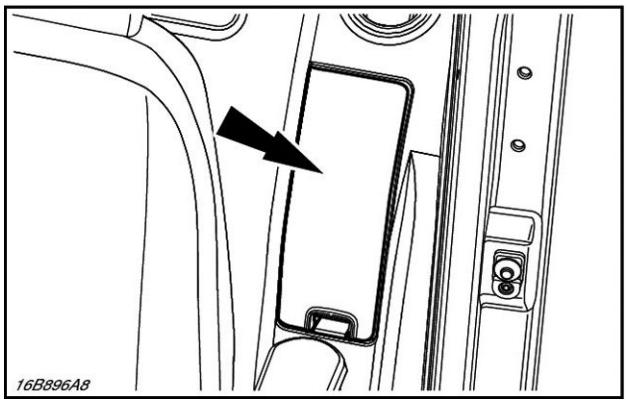

16B896A8 1

Remove the cover of the fuse box.
To replace a fuse, refer to page **6-78**.

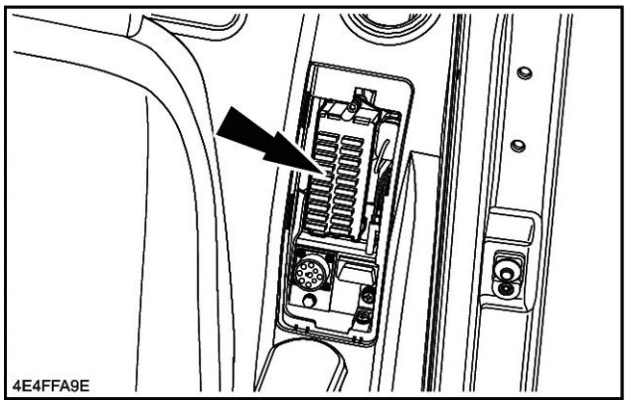

4E4FFA9E 2

OVERHEAD CONTROLS

Roof curtain

To open the roof curtain, slide it toward the rear using the handles. To close the curtain slide it toward the front.

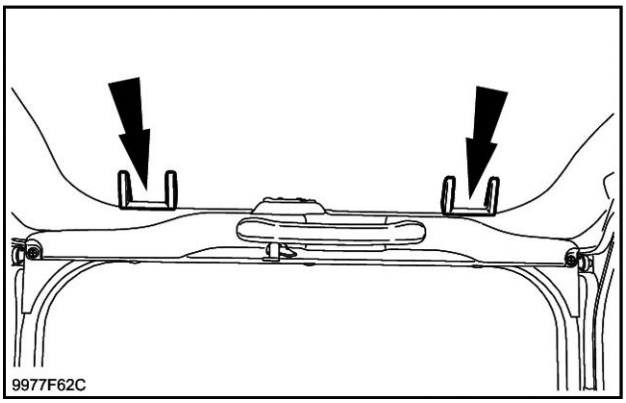

9977F62C 1

Roof hatch

Open the roof curtain. To open the roof hatch, operate the two handles and push the handles. To close the roof hatch, pull the two handles until engagement.

NOTICE: *Since roof hatch opening is assisted by two gas struts, simply follow through the closing movement without pulling or trying to hold it back.*

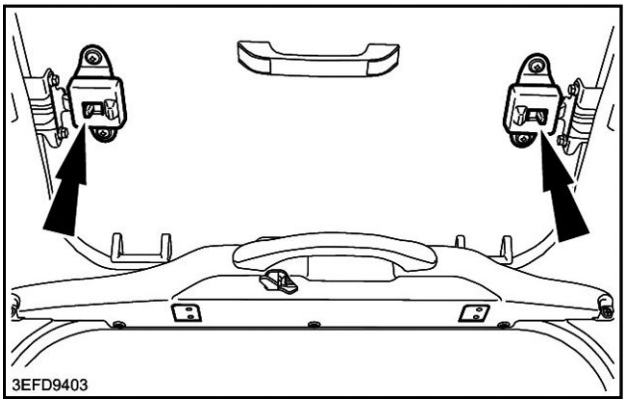

3EFD9403 1

Sun shield (optional)

The sun shield is fixed to the windshield and can easily be positioned as required.

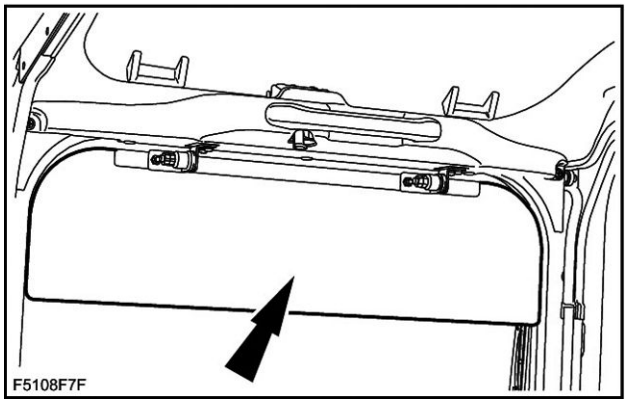

F5108F7F 1

Cab internal lighting

The light is located on the top of the cab on the left-hand side and is controlled by a three position switch set in the lamp base.

Positions: **"On"** (continuous operation), **"Off"** (shut-down) and intermediate position goes off 30 seconds after closing the door.

ATTENTION: *Make sure that the lights are switched off after use, otherwise the batteries may become discharged.*

NOTE: *To replace bulbs, (Refer to page **6-85**).*

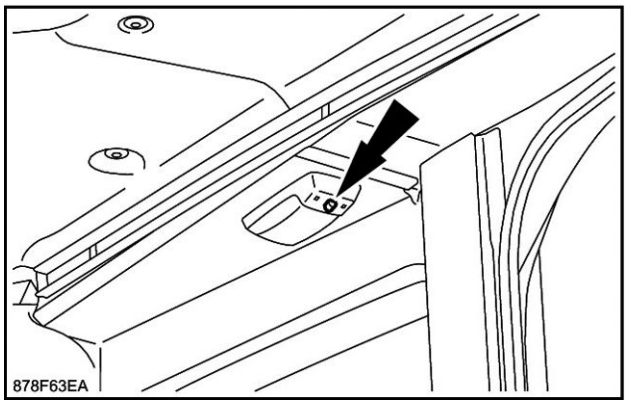

878F63EA 1

EXTERIOR CONTROLS

Fuel tank

⚠ WARNING

Fire hazard!
When handling diesel fuel, observe the following precautions:
1. Do not smoke.
2. Never fill the tank when the engine is running.
3. Wipe up spilled fuel immediately.
Failure to comply could result in death or serious injury.

W0099A

The fuel tank capacity is:
200 l (**52.8 US gal**).

Use suitable fuel. (Refer to page **6-5**).

NOTICE: *Do not put a moisture elimination product (water draining agent) in the fuel tank. (It may damage the engine).*

NOTE: *Clean around the fuel cap before refuelling and do not remove the filter located in the filler orifice. (Refer to page **6-64**).*

NOTE: *In cold weather, use fuel corresponding to the ambient temperature. (Refer to page **6-5**).*

ATTENTION: *In cold weather, fill the fuel tank after each working day to prevent the formation of condensation.*

When installing the fuel cap, make sure that it is correctly placed in the notches and then lock it by turning it up against the stop.

NOTE: *Use the ignition key to lock the fuel cap.*

The fuel tank is equipped with a max level visual gauge.

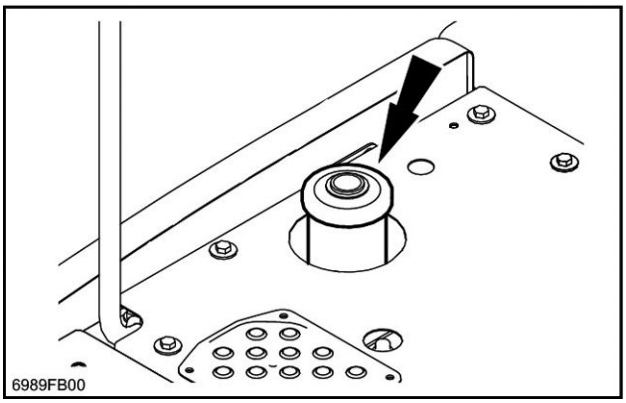

6989FB00 1

Rear view mirrors

⚠ WARNING

Avoid injury and/or machine damage!
Keep the mirrors clean and properly adjusted.
Failure to comply could result in death or serious injury.

W1078A

Cab

Two rear view mirrors.

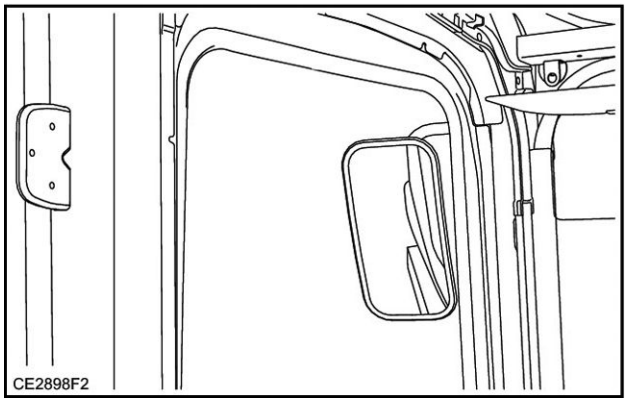

CE2898F2 1

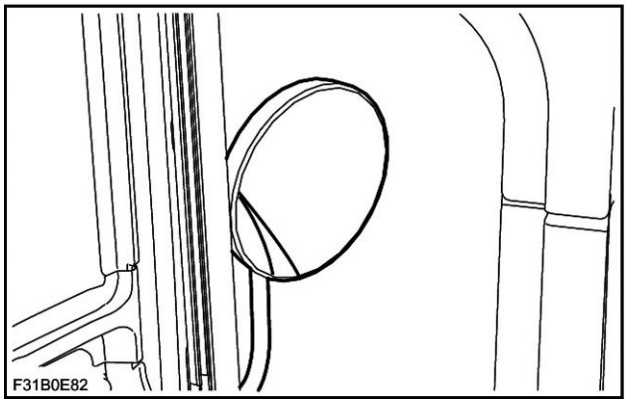

F31B0E82 2

Upperstructure

Two rear view mirrors at the front.

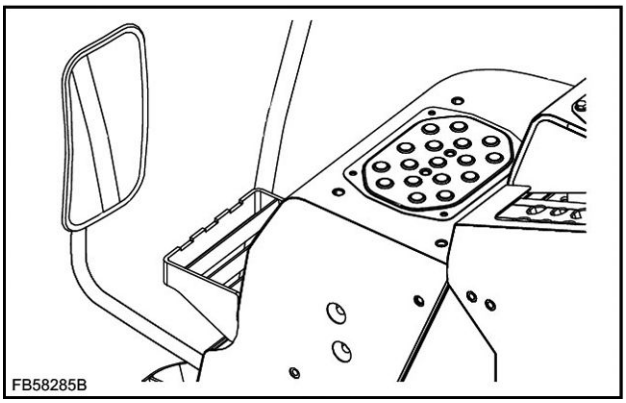

FB58285B 3

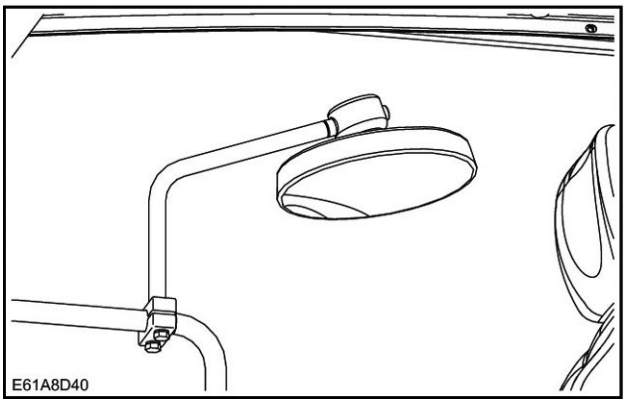

E61A8D40 4

Two rear view mirrors at the rear.

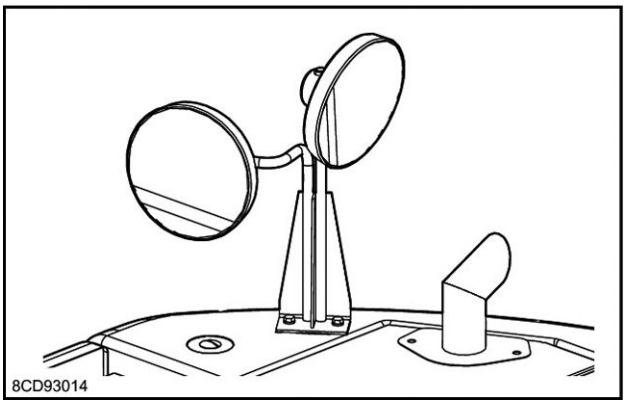

8CD93014 5

Visibility zone

The illustrations below show the visibility zone that each rear view mirror must cover.

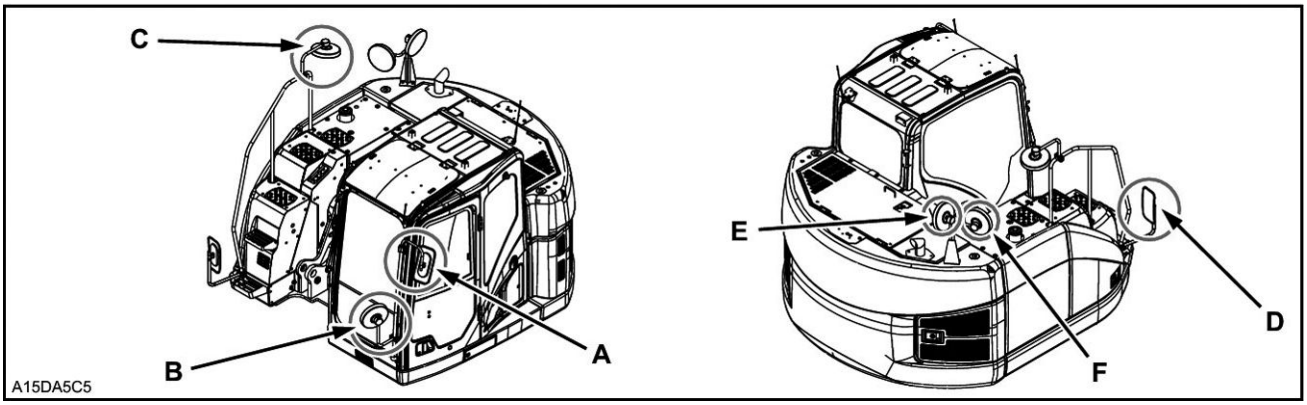

A15DA5C5 6

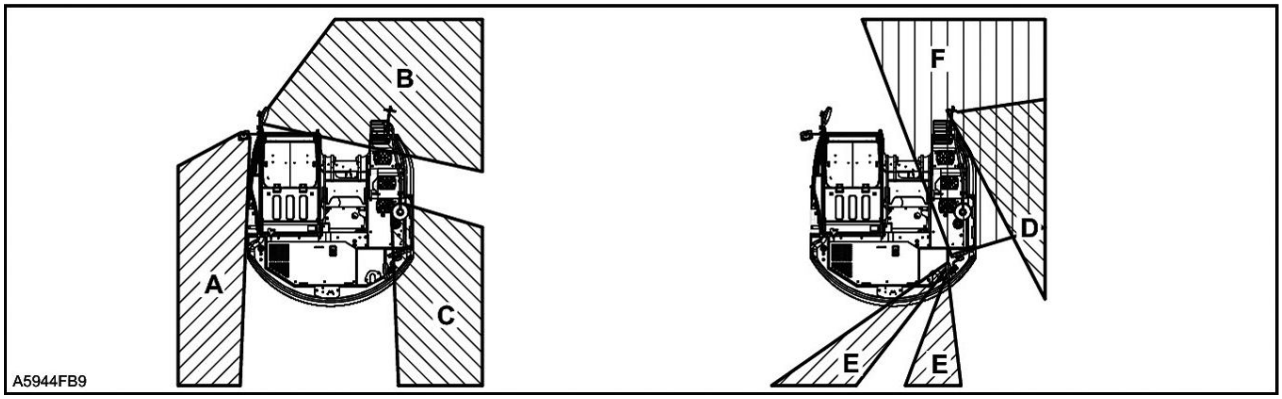

A5944FB9 7

For adjustment and mounting of rear view mirrors, refer to page **4-30**.

Rear view camera

Located in the rear of the machine, make sure the rear view camera is clean before undertaking any travel.

NOTE: *(optional) A second camera is located in the right-hand side on the machine.*

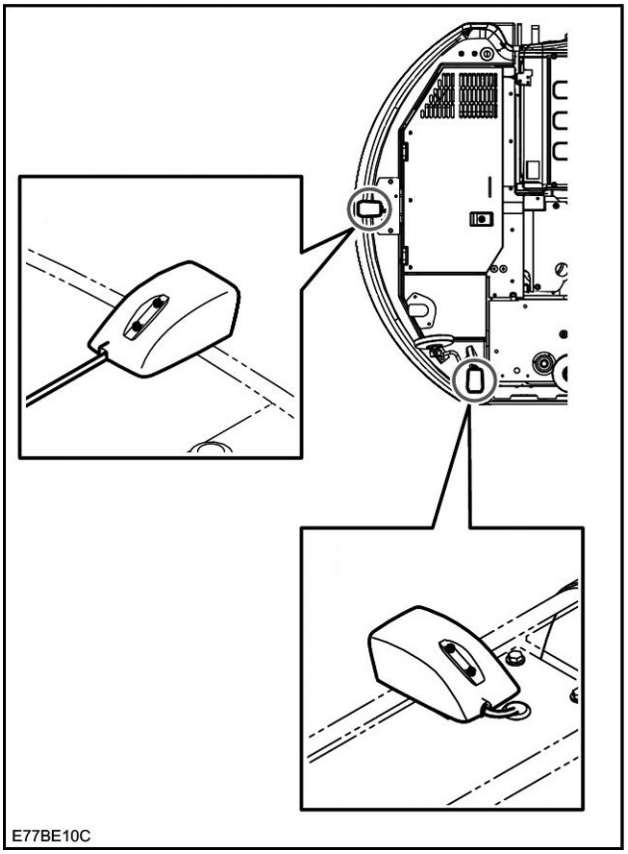

E77BE10C 1

Side doors

⚠ WARNING

Moving parts!
Make sure all entry and mechanical access doors are properly closed before operating the machine. Failure to comply could result in death or serious injury.

W0238A

Use the outside handle to open the doors. To hold the doors, open, remove the struts from their storage position and install them in the holes provided. When closing, put the struts back into their storage housing.

NOTICE: *Always install the struts when the doors are open.*

ATTENTION: *Never leave tools or other objects behind the side doors.*

NOTE: *Use the ignition key to lock the side doors.*

Right-hand door

The right-hand door gives access to certain hydraulic components (pump, filter, etc.) and also to the engine fuel and oil filters.

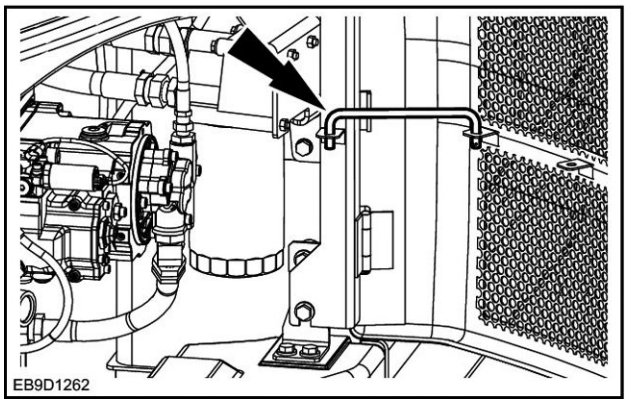

EB9D1262 1

Left-hand door

The left-hand door is mainly for obtaining access to the batteries, battery master switch (if equipped), windshield washer tank, air filter, radiator, oil cooler, etc.

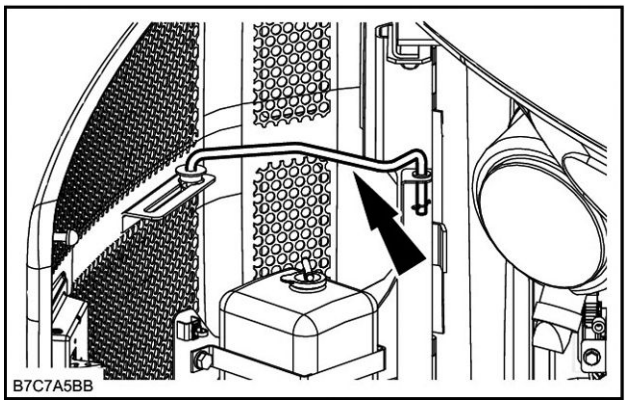

B7C7A5BB 2

Battery master switch (if equipped)

Located near the batteries, open the left-hand door.

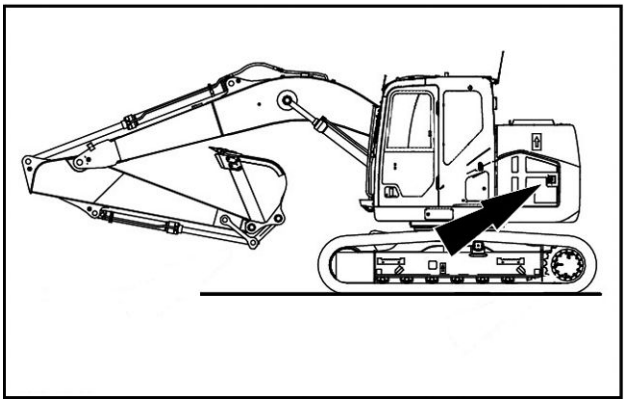

71DCD62B 1

When the key of the battery master switch is in **"I"** (On) position, all electrical circuits are connected.

When the key of the battery master switch is in **"O"** (Off) position, the electrical circuits are disconnected.

NOTICE: *Never turn the key of the battery master switch in **"O"** (Off) position when engine is running, the electrical systems can be damage.*

NOTICE: *When the engine is stopped, always wait one minute minimum before to place the key of the battery master switch in **"O"** (Off) position, otherwise the computer program of the hydraulic will not exit successfully.*

NOTE: *When the key of the battery master switch is in **"O"** (Off) position, the stations stored on the radio presets and the time set for the clock will be all cleared.*

NOTE: *The key can be remove from the battery master switch.*

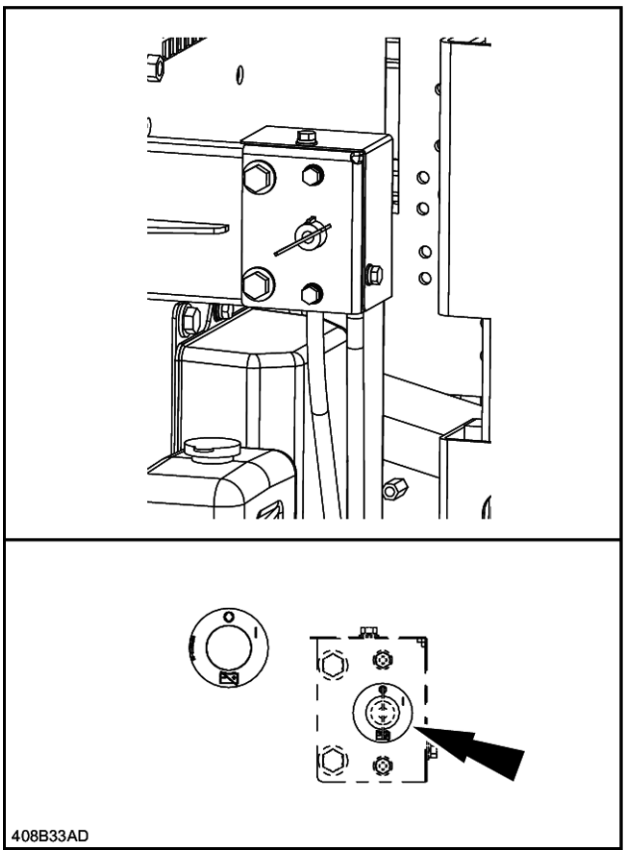

408B33AD 2

Engine hood

Opening

Pull the handle then lift the hood to the maximum so that it gets locked with the support strut.

ATTENTION: *Once the hood is completely opened, make sure the locking system is correctly engaged.*

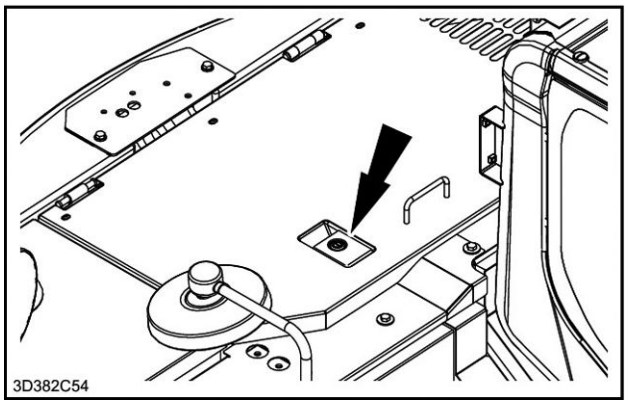

3D382C54 1

Closing

⚠ WARNING

Moving parts!
Make sure the hood is closed properly before driving the machine.
Failure to comply could result in death or serious injury.

W0280A

Lift the hood slightly, pull the support strut back lower the hood and lock it using the the ignition key.

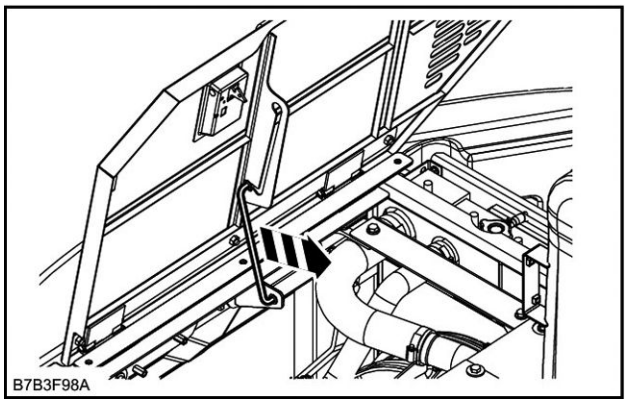

B7B3F98A 2

Lower panels

⚠ WARNING

Moving parts!
Make sure the lower panels are properly closed before driving the machine.
Failure to comply could result in death or serious injury.

W0910A

Located under the upperstructure frame, these panels provide access to certain machine components.

ATTENTION: *Do not run the machine with the panels removed.*

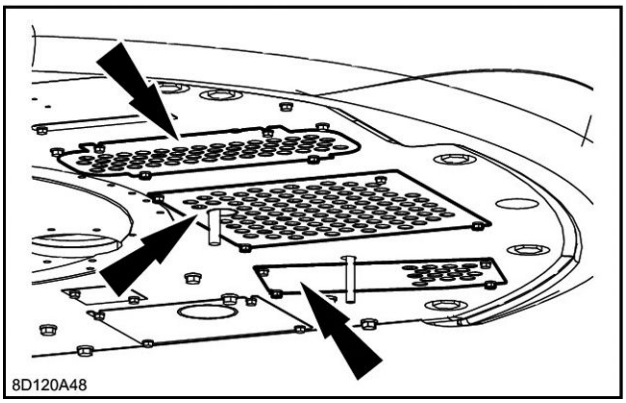

8D120A48 1

Windshield washer reservoir

This reservoir, located in the rear left-hand compartment, is equipped with an electric pump which is operated from the monitor switches, refer to page **3-24**.

NOTICE: *Never operate the windshield washer control when the reservoir is empty. This could cause damage to the electric pump.*

Remove the cap to add windshield washing fluid.

NOTE: *In cold weather, add anti-freeze to the windshield washer water.*

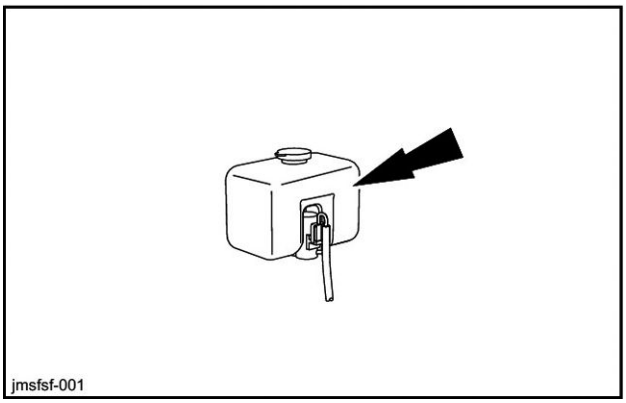

JMSFSF-001 1

Load handling eyes

⚠ WARNING

Equipment failure could cause accident or injury!
Do not use the hook end of the coupler when lifting loads. The sling can come out of the coupler and the load can fall.
Failure to comply could result in death or serious injury.

W0221A

⚠ WARNING

Falling object hazard!
Never weld hooks or lugs on the bottom plate of the bucket for handling operations. The connecting rod eye is the only authorized attachment point. Always have a bucket installed when using the connecting rod eye.
Failure to comply could result in death or serious injury.

W0246A

When lifting loads, the slings and chains must be attached to the load handling eye on the bucket or on the quick coupler (if equipped). (Refer to page **4-20**).

NOTICE: *This load lifting eye will only carry the load indicated in the maximum lift chart. See decal inside the cab. (Refer to page **2-8**).*

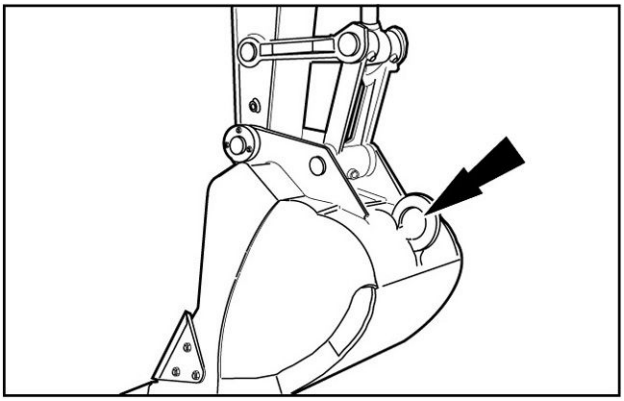

CT10D001A 1

ATTENTION: *The quick coupler eye can be used for handling loads up to **10 t** (**22046.23 lb**).*

ATTENTION: *This attachment point will only carry the load indicated in the load handling limits chart. (Refer to page **4-20**).*

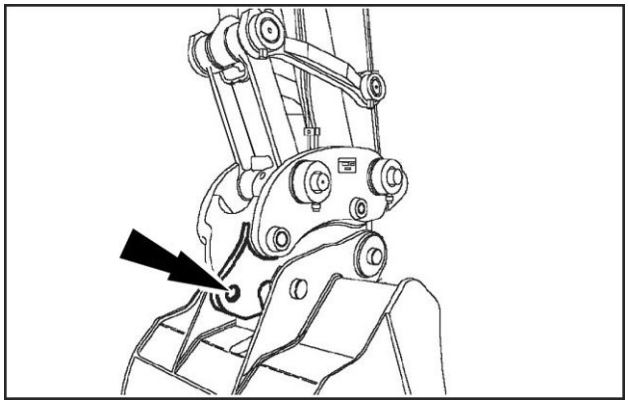

CD00H002ZA 2

Towing holes

⚠ WARNING

Misuse hazard!
Towing is a delicate maneuver that is always carried out at the risk of the user. The manufacturer's warranty does not apply to incidents or accidents that occur during towing. Where possible, carry out the repairs at the site.
Failure to comply could result in death or serious injury.

W0286A

Located at the front and rear of the undercarriage.

These holes are used to tow heavy objects, up to **10 t** (**22046.23 lb**). (Refer to page **5-9**).
Make sure that the slings, chains and accessories are in perfect condition and can bear the load to be moved.

ATTENTION: *Towing must always be done in alignment with the undercarriage.*

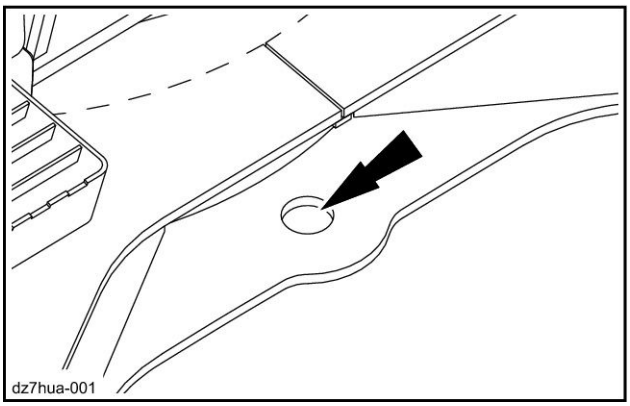

DZ7HUA-001A 1

Safety valves (optional)

Service specifications

Check by your CASE CONSTRUCTION Dealer: Every 6 months

The role of the safety valve is to stop the attachment from dropping due to valve spool leakage in neutral position or in the event of a line or hose accidentally breaking. In the latter event, they also ensure that the attachment may be lowered gently to the ground.

On boom cylinders

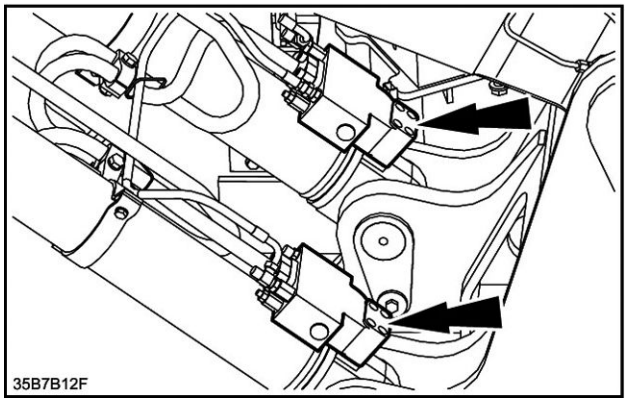

35B7B12F 1

On arm cylinder

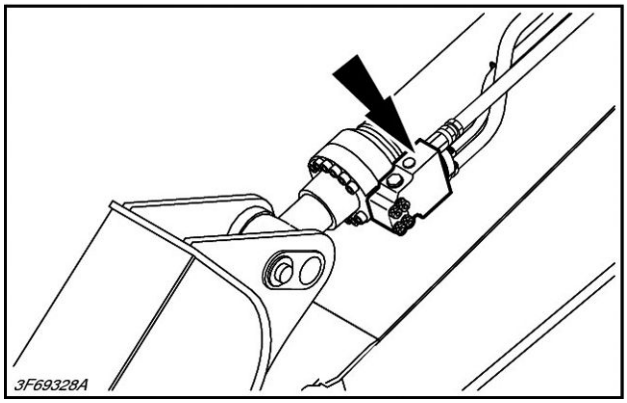

3F69328A 2

Optional tool supply valves (optional)

Located on each side of the end of the arm, these valves are used to ensure oil supply to optional tools, for example, hydraulic breakers, etc. These valves have two positions, open/closed.

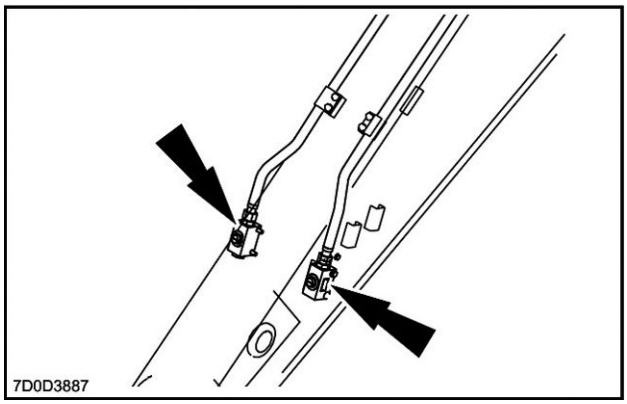

7D0D3887 1

Fuel tank filler pump (if equipped)

⚠ WARNING

Fire hazard!
When handling diesel fuel, observe the following precautions:
1. Do not smoke.
2. Never fill the tank when the engine is running.
3. Wipe up spilled fuel immediately.
Failure to comply could result in death or serious injury.

W0099A

NOTICE: *Do not put a moisture elimination product (water draining agent) in the fuel tank. (It may damage the engine).*

ATTENTION: *This pump is located in the front storage box and is to be used for fuel only. Use suitable fuel, (refer to page **6-5**).*

1. Park the machine on flat, horizontal ground, stop the engine and set the ignition key to the **"On"** position (contact).

2. Take the inlet pipe out of the storage compartment.

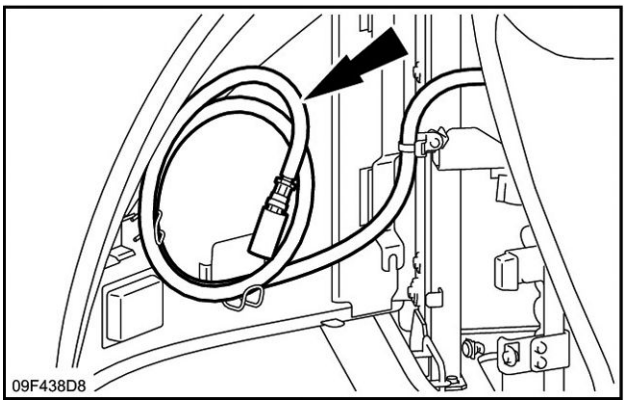

09F438D8 1

3. Measure the height of the drum and place the identification clamp **(1)** of the suction tube at a length slightly less than that of the drum height.

4. Make sure that the end strainer of the suction tube is correctly attached and then insert the suction tube in the drum.

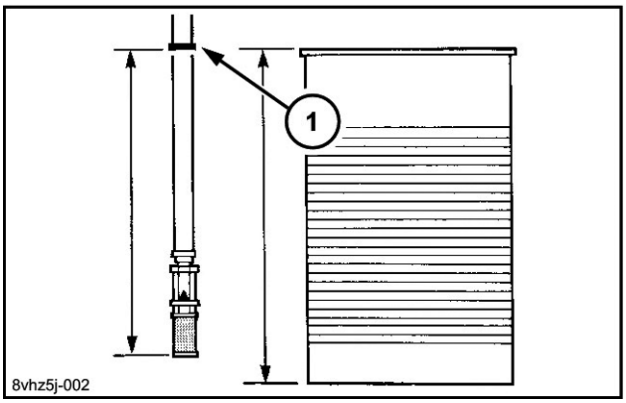

8VHZ5J-002 2

5. Remove the fuel tank filler cap.

⚠ WARNING

Burn hazard!
If the filler cap remains on during the refueling process, removing the cap after refueling could cause an accident. To reduce this risk, ALWAYS remove the fuel tank filler cap before refueling with the fuel tank filling pump.
Failure to comply could result in death or serious injury.

W0247A

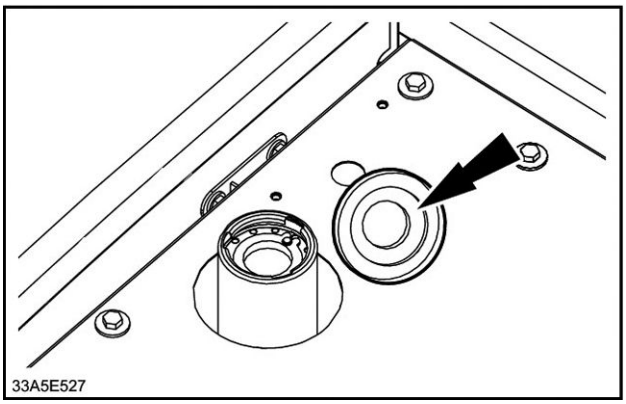

33A5E527 3

6. Select the filling method using the selector switch located to the right of the filling pump.
   "Auto" mode, the pump stops filling automatically and the audible alarm sounds when the fuel tank is full.
   "Manual" mode, monitor the filling by means of the reservoir gauge and stop when necessary.
7. Turn the switch located on the pump to the **"On"** position (start). Filling begins.

   NOTE: *It is possible to stop filling at any time for any reason (empty drum, for example) by turning the switch to the* ***"Off"*** *position.*
8. When the fuel tank is full, turn the switch and the selector switch to the **"Off"** position (stopped). In **"Auto"** mode, the audible alarm device will cease to function.
9. Run the pump for a few moments to empty the pipe outside the drum. Clean and replace the inlet pipe in the front storage compartment.
10. Refit the fuel tank filler cap.
11. Place the ignition key in **"Off"** position.

NOTE: *The pump is equipped with a* ***10 A*** *fuse.*

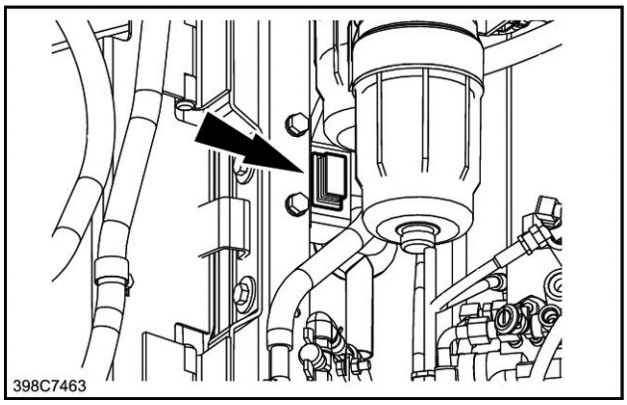

398C7463 4

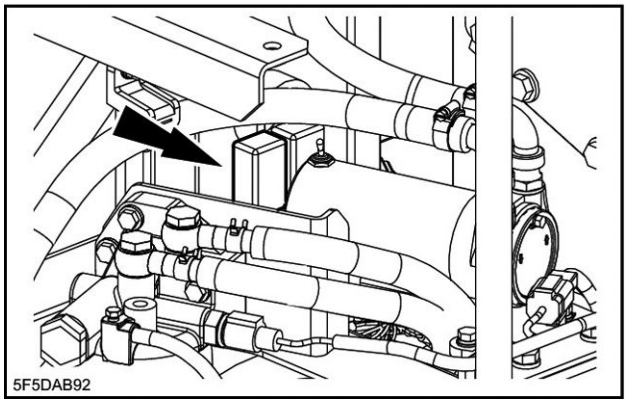

5F5DAB92 5

Cab protection (ROPS and FOPS)

⚠ DANGER

Crushing hazard!
Do not change the Roll Over Protective Structure (ROPS) in any way. Unauthorized changes such as welding, drilling, or cutting will weaken the ROPS and decrease your protection. Have an authorized dealer replace the ROPS if damage of any kind occurs. DO NOT TRY TO REPAIR THE ROPS.
Failure to comply will result in death or serious injury.

D0037A

⚠ WARNING

Roll-over hazard!
After an accident, fire, tip over, or roll over, a qualified technician MUST replace the Roll-Over Protective Structure (ROPS) before returning the machine to the field or job site operation.
Failure to comply could result in death or serious injury.

W0134A

The machine is equipped with a **ROPS (Roll-Over Protective Structure)** and **FOPS (Falling Objects Protective Structure)** (optional) for the cab. The protective structure, the fitting supports and fastening elements on the machine are an integral part of the structure.
After a fire, corrosion or collisions, any possible damage to the cab protection structure must be carefully evaluated by specialised and qualified personnel. In any case, all damaged parts must be replaced by genuine spare parts, so that the original conditions are reinstated. Consult your CASE CONSTRUCTION Dealer to verify the functionality of the cab structure or the requirement for the replacement of the entire structure or parts of it.

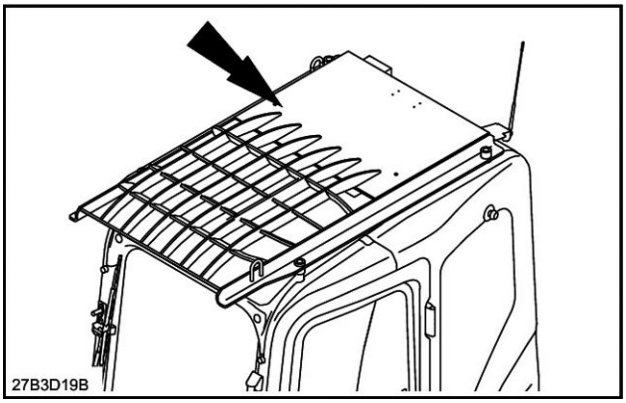

27B3D19B 1

Match the part number. Do not perform modifications.

ATTENTION: *If the **ROPS** cab is damaged, replace the cab. When replacing the cab, check the parts list for the part number of the gap appropriate for the model. If the wrong cab is mounted, the cab could be damaged when the machine rolls over, which could result in the death or serious injury to the operator or damage to the machine. Adding non-regulation parts or modifying the cab main unit is prohibited in order to ensure strength.*

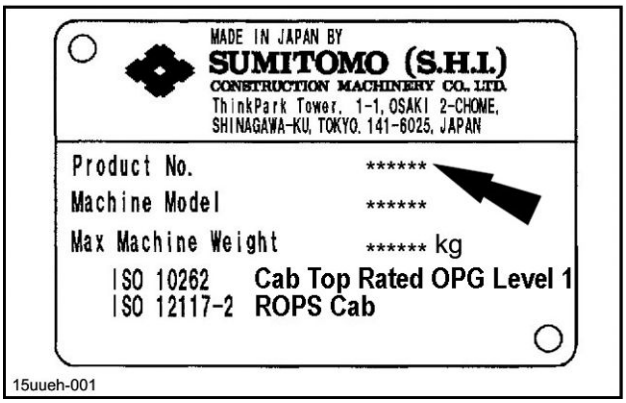

15UUEH-001 2

4 - OPERATING INSTRUCTIONS

COMMISSIONING THE UNIT

Cab - Operating

Before using the machine

⚠ DANGER

Improper operation or service of this machine can result in an accident.
Do not operate this machine or perform any lubrication, maintenance, or repair on it until you have read and understood the operation, lubrication, maintenance, and repair information.
Failure to comply will result in death or serious injury.

D0010A

Before operating this machine, be sure to do the following:

1. Check the level of all fluids (engine oil, hydraulic fluid and coolant) and make sure that the fluids and lubricants are suitable for prevailing conditions. (Refer to pages **6-5** and **4-11**).
2. Carry out the daily maintenance operations. (Refer to page **6-1**).
3. Inspect the machine, look for any signs of possible leakage and check the hoses. Tighten or replace as necessary.
4. Refer to page **4-3** if the machine is new or if the engine has been reconditioned.
5. Check the track assemblies. (Refer to page **6-56**).
6. Clean the steps and access handles. Grease, oil, mud or ice (in winter) on the steps and access handles can causes accidents. Make sure they are kept clean at all times.
7. Clean or replace any decals which are illegible. (Refer to page **2-8**).
8. Make sure that the engine hood and the side doors are properly closed and latched.
9. Secure the cab door in either fully closed or fully opened position. (Refer to page **3-1**).
10. Remove any obstructions which hinder visibility. Clean the windshield, the windows and the rear view mirrors.
11. Check that no tools or other items have been left on the machine (be it on the undercarriage or the upperstructure) or in the operator's compartment.
12. Make sure nobody is on or under the machine. The operator must be alone on the machine.
13. Make sure nobody is standing in the machine working area.
14. Find out about current safety measures in use on the work site.
15. Work out a convenient means of escape from the machine (emergency exit via the windshield, the rear window glass) in the event of the machine turning over or tipping over or the cab door being jammed.
16. Before undertaking any travel or working operations during hours of darkness, make sure the lighting and signalling equipment is fully operative.

Operating the machine

⚠ WARNING

Driving hazard!
Check all controls and safety devices in a safe, open area before starting work.
Failure to comply could result in death or serious injury.

W0248A

When operating the machine, be sure to do the following:

1. When starting the engine, be sure to use the correct procedure for the prevailing weather conditions. (Refer to page **4-7**).
2. Regularly consult the hourmeter to ensure that all servicing operations are carried out punctually. (Refer to page **6-1**).
3. If you use your machine in particularly harsh conditions (dusty or corrosive atmosphere), the servicing intervals should be reduced accordingly.
4. Take note of the locations of pipes/cables before starting work.
5. Do not work near overhead high-voltage electric lines without checking beforehand that all necessary measures have been taken to respect the minimum distances:
   Less than 57 000 volts: **3 m** (**9.8 ft**)
   More than 57 000 volts: **5 m** (**16.4 ft**)
6. When working on a public highway, use standard traffic signs and take into consideration the working range of the upperstructure and its attachments. Local regulations stipulate the number, type and location of reflector strips.
7. Never operate the working or travel controls unless you are properly seated in the operator's seat with the seat belt correctly fastened.
8. Modify your driving to suit the type of work and working conditions.

9. Do not allow anyone within the machine's operating radius. Stop all operations until everyone has moved away.
10. Refer to page **4-3** if the machine is new or if the engine has been reconditioned.
11. Operate all controls gradually to ensure smooth machine operation.
12. Refer to page **4-22** if the machine will be standing in water during use.
13. Refer to page **5-1** when driving the machine onto a trailer.
14. Refer to page **4-20** when it is necessary to lift the machine.
15. Refer to page **5-9** when it is necessary to tow the machine.
16. In some configurations, the working range of the attachment allows the tool to interfere with the machine. Always maintain a safe minimum distance between the tool and the machine.
17. Never use the attachment for sweeping the ground to level out rubble or push objects (transversal stress on the attachment).
18. Avoid running the engine in a confined space. If there is no alternative, proper ventilation must be provided at all times.
19. Dust, smoke or mist can reduce visibility and cause an accident. Reduce speed or come to a complete halt until visibility has improved.
20. In the event of an operation problem or failure, move the machine to a safe place, lower the attachment and dozer blade (if equipped) to the ground, stop the engine, remove the ignition key. Locate the problem, report it if necessary and take the necessary steps to warn others not to attempt to operate the machine.
21. Do not stop the engine without taking prevailing weather conditions into consideration. (Refer to page **4-14**).
22. Refer to page **4-46** when you have to park the machine.
23. Whenever load handling operations are to be carried out, it is imperative to adhere strictly to the instructions given in this manual and local legislation. (Refer to page **4-20**).

Cab - Running-in Procedure

Your machine will last longer and will give better and more economical performance if you pay particular attention to the engine during the first twenty hours of operation.

During this period:

- Warm up the engine before using it under load.
- Do not run the engine for a long period at idle speed.
- Check all instruments frequently.
- Check the oil levels and coolant solution level frequently.

During the run-in period, the following checks and servicing operations should be carried out in addition to those specified in the service schedule:

After the first 50 hours

Check the pad screws are tightened to the correct torque. (Refer to page **6-56**).

Check all nuts and screws are tightened to the correct torque. (Refer to page **6-77**).

(If equipped) Check the cab protective structure. (Refer to page **6-66**).

After the first 250 hours

Replace the pilot circuit filter and the return filter. (Refer to page **6-39**).

Replace the oil in the travel reduction gears. (Refer to page **6-54**).

Replace the oil in the swing reduction gear. (Refer to page **6-51**).

STARTING THE UNIT

Anti-theft protection

To prevent the machine from being stolen it is possible to use the anti-theft protection, which makes it necessary for a special code to be entered before the machine can be operated.

To configure the anti-theft protection, consult your CASE CONSTRUCTION Dealer.

The effects of the device are:

- The engine runs at idle speed.
- The audible alarm device will sound.
- The engine stops if the machine is handled.

Once the machine has been configured, a special access code has to be recorded which must be entered whenever you start the engine.

ATTENTION: *Once the code has been recorded, do not forget it, as it can not be changed without consulting your CASE CONSTRUCTION Dealer.*

Code recording

1. Set the ignition key to the **"On"** position
2. "Password?" and 4 boxes are displayed on the display screen.

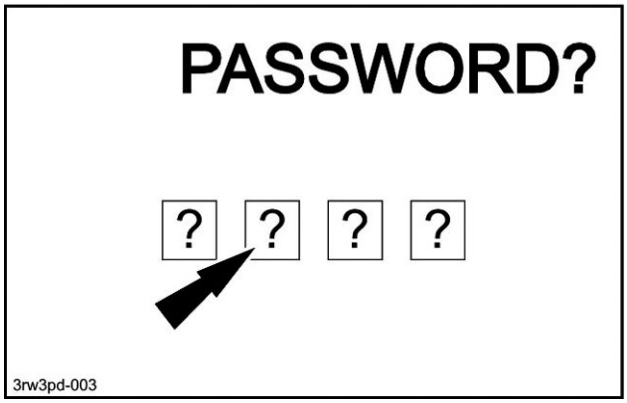

3RW3PD-003 1

3. - Use the following buttons to record a code.
   - Move the cursor to the left with the front glass washer button **(1)**.
   - Move the cursor to the right with the working light button **(2)**.
   - Increase the value (0, 1, 2, 3...) with the front glass wiper button **(3)**.
   - Decrease the value (...3, 2, 1, 0) with the engine idling select button **(4)**.

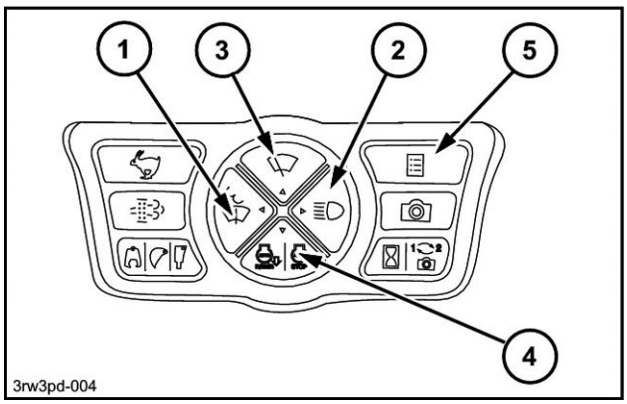

3RW3PD-004 2

4. After entering all 4 digits, press the menu button **(5)** to register the password code. The screen returns to the normal display.

ATTENTION: *Be sure to keep a record of the code number.*

Using the anti-theft protection

The anti-theft protection has to be activated when you are shutting down the engine. Turn the ignition key from **"On"** to **"Off"** for about 2 seconds at a time until the audible alarm device sounds. The icon of the anti-theft protection is displayed on the screen, the anti-theft protection is activated, now the access code will have to be entered when starting the engine.

You are not obliged to activate the anti-theft protection. In that case all you have to do is to turn the ignition key to the **"Off"** position when shutting down the engine. In that configuration, it will not be necessary to enter the code when starting the engine.

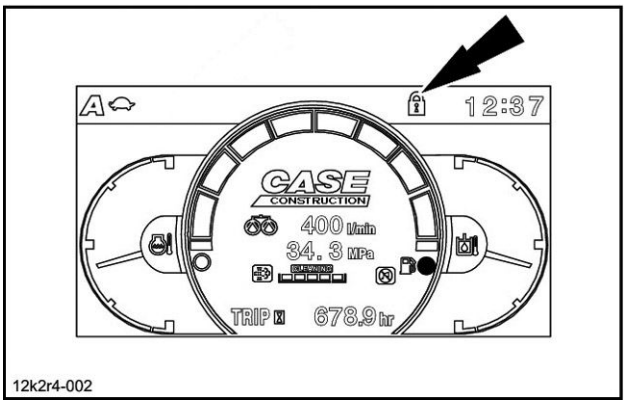

12K2R4-002Z 3

Entering the access code

If the anti-theft protection was activated the last time the engine was shut down, it will then be necessary to enter the access code before being able start it again.

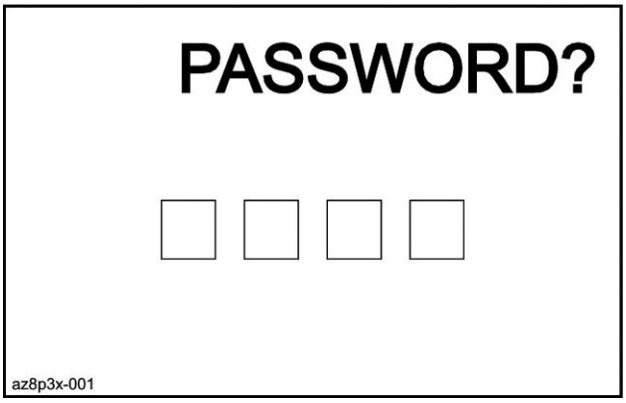

AZ8P3X-001 4

1. Turn the ignition key to the **"On"** position.
2. The message "Password?" and four boxes will appear on the display screen.
3. Enter the code in the same manner as during registration. Once all four digits have been entered, validate with the button **(5)**.

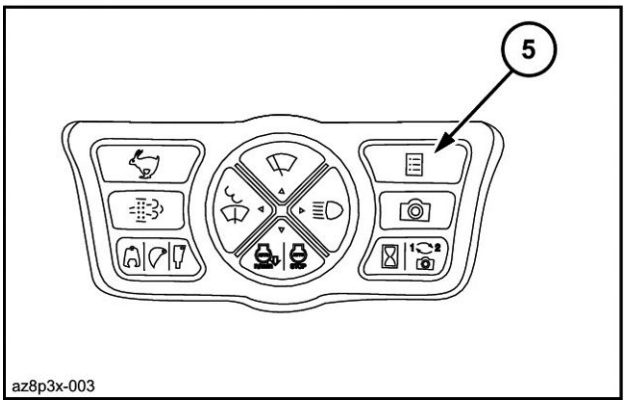

AZ8P3X-003 5

If the access code has been entered correctly, the icon of the anti-theft protection will disappear from the screen and it will be possible to start the engine.
If the code is wrong or if the code is different from the one registered, the message “Error” is displayed, the operation has to be restarted.
Place the ignition key in the **“Off”** position and repeat Steps 1 to 3.

NOTE: *If the anti-theft protection was activated the last time the engine was turned off, it will still be possible to start the machine without the access code, or with the wrong code, but the engine will run at idle speed, and will stop if the machine is handled.*

AZ8P3X-002 6

Starting the engine

NOTE: *If the machine has been out of use for some time. (Refer to page* ***6-92****).*

NOTE: *Refer to page* ***6-80*** *if you have to start the engine using booster batteries.*

1. Take up position correctly in the operator's seat with the seat belt correctly fastened. (Refer to page **3-5**).
2. Make sure that the function cancellation lever is in the raised position.

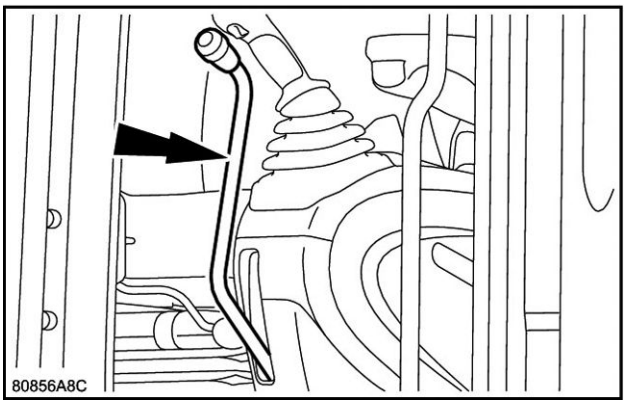

80856A8C 1

3. Make sure the engine throttle button **(1)** is in low idle position. In cold weather, leave it in half-way position.
4. Turn the ignition key **(2)** to **"On"** position.
5. If necessary, enter the anti-theft code. (Refer to page **4-4**).
   In cold weather, the "Engine pre heat" icon appears on the systems display panel.

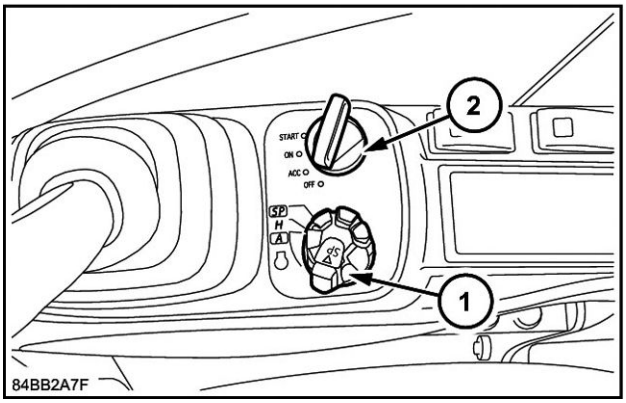

84BB2A7F 2

6. Sound the horn button on the left-hand control lever to give warning of your intention to start the machine.

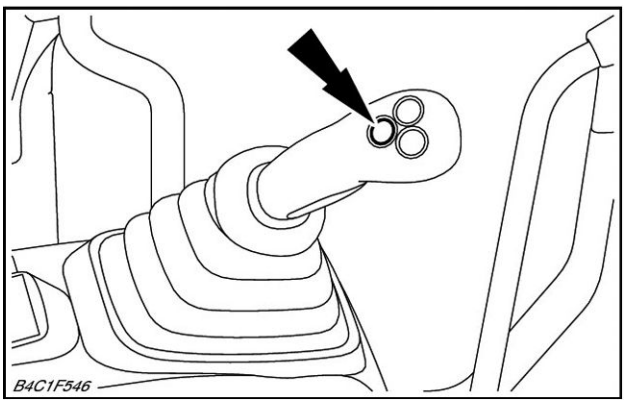

B4C1F546 3

7. When the icon disappears, turn the ignition key to the **"Start"** position. Release the key as soon as the engine starts to turn. If the engine stops, wait about a minute and perform the operation again.

NOTICE: *Do not operate the starter motor for more than ten seconds at one time. Do not operate the starter motor when the engine is running.*

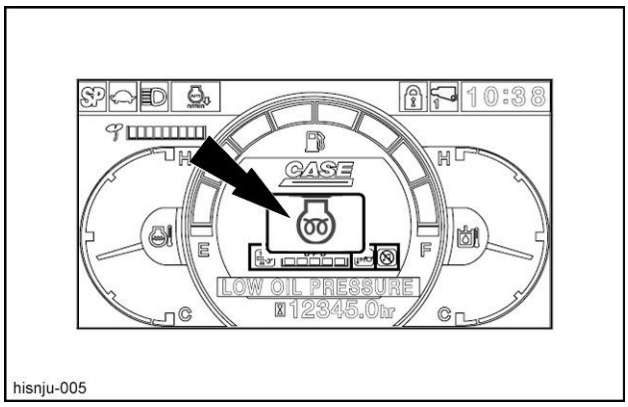

HISNJU-005BZ 4

8. Run the engine until the "Automatic heating" icon disappears from the systems display panel.

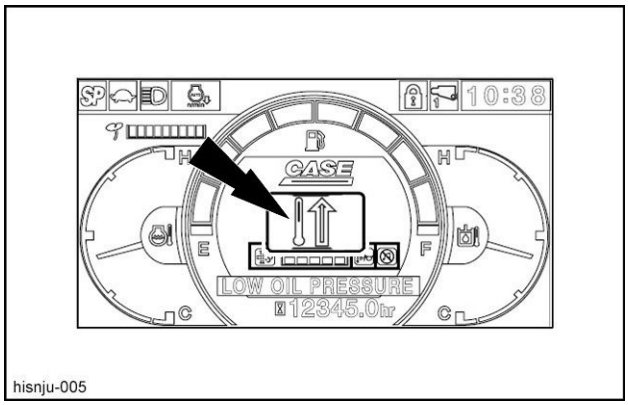

HISNJU-006BZ 5

9. Lower the function cancellation lever.

NOTE: *Check the systems display and console frequently while the engine is running. (Refer to page* ***4-10****).*

NOTICE: *This machine is equipped with a new type of engine incorporating a high-pressure fuel injection system which reduces the emission to the environment and respects the regulations applicable to level 4 engine emissions. Starting this engine takes about 1 second before stabilisation.*

NOTICE: *If the engine does not start at the first attempt, operate the starter motor for 10 seconds then wait for 1 to 2 minutes before retrying. When cold, the engine is at times difficult to start. But in all cases, do not operate the starter motor for more than 10 seconds.*

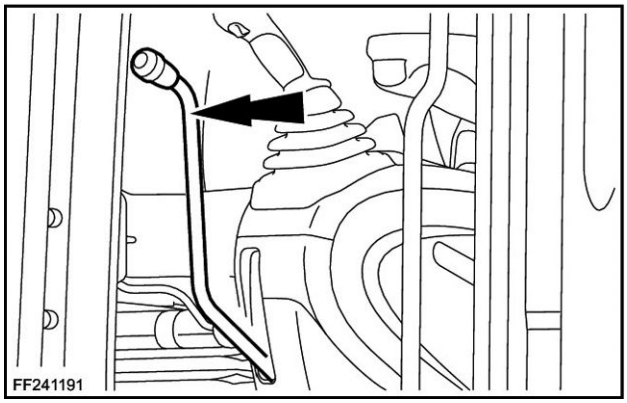

FF241191 6

Bringing the machine up to operating temperature

NOTICE: *Normal operating temperature of the hydraulic fluid is between* ***50 °C (122.0 °F)*** *and* ***80 °C (176.0 °F)****, in the middle of the temperature indicator.*

After starting the engine and before using the machine, allow the hydraulic fluid to reach a temperature of **20 °C** (**68.0 °F**), as indicated by the appearance of the first two segments on the hydraulic fluid temperature indicator. (Refer to page **3-19**).

Engine automatic warm-up

Once the engine has started, the warming-up process begins automatically. At first, engine speed is held at a predetermined, low level. As the temperature increases, engine speed increases in proportion. It is possible to interrupt the warming-up process at any time, simply by manually changing engine speed or by operating one of the control levers. Warming-up takes approximately 5 to 10 minutes.

Manual engine warm-up

With the engine throttle button a quarter open, start the engine and allow it to run approximately for 5 to 10 minutes. When the coolant temperature reaches the second segment, carry out the hydraulic fluid warm-up procedure.

Hydraulic fluid warm-up

1. Turn the engine throttle button to half-open position. Lower the function cancellation lever. Operate the bucket control slowly until the bucket is completely closed. Operate the arm retracting control slowly until the arm is completely retracted and hold the control in this position for 30 seconds. During this time the temperature of the hydraulic fluid will increase.
2. After 30 seconds, extend the arm completely and hold the control in this position a further 30 seconds.
3. Continue the arm extending and retracting procedure until the temperature rises (first two segments of the temperature indicator).
4. Operate the travel and attachment controls three or four times to circulate the hydraulic fluid.

Engine operation

⚠ WARNING

Hot liquid under pressure!
Fuel in the high pressure fuel line is still under pressure immediately after you shut down the engine. Before performing any maintenance or inspection, wait for 2 minutes after engine shutdown to allow the pressure to drop.
Failure to comply could result in death or serious injury.

W0249A

⚠ WARNING

Electrical shock hazard!
High voltage is charged to the controller and/or to the injector while the engine is running and immediately after shutdown. DO NOT touch the controller or the injector. Consult your dealer if it is necessary to touch these parts for maintenance purposes.
Failure to comply could result in death or serious injury.

W0250A

When the engine has started and before beginning work, the following procedure must be observed:

1. Let the engine idle for about five minutes until it has warmed up.
2. Move the engine throttle button to the maximum speed position.

Once normal operating temperature has been reached, check the following:

- The exhaust smoke is normal.
- There is no abnormal noise or vibration.
- There are no oil, fuel or water leaks.

The engine should be run at full speed when operating conditions permit.

The operating speed of the machine and of the attachment should be controlled by means of the control levers.

Check the systems display and console regularly.

Stop the engine immediately if one of the following situations occurs:

- Sudden increase or decrease in engine speed.
- Abnormal noise.
- Black smoke at the exhaust.
- A message appears on the display screen and the audible alarm device sounds.

Operating the machine in hot or cold weather

In cold weather

Follow the recommendations shown below:

Batteries

- They should be fully charged.

Fuel

- To prevent condensation forming and water getting into the fuel system, fill the fuel tank after each day's work and drain off any water before starting the next day's work.
- To prevent crystals forming at **-2 °C** (**35.6 °F**), use fuel which is rated for the ambient temperature or add an appropriate antifreeze to the fuel. (Refer to page **6-5**).

Engine oil

- It should be of the right viscosity for the ambient temperature. (Refer to page **6-5**).

Hydraulic fluid

- The viscosity must correspond to the ambient temperature conditions. (Refer to page **6-5**).

Coolant solution

- It must have specifications corresponding to the ambient temperature. (Refer to page **6-5**).

In hot weather

Follow the recommendations made below:

- Keep the coolant at the correct level in the coolant reservoir and in the radiator.
- Use the correct solution of ethylene glycol and water in the cooling system.
- Test the radiator cap before hot weather starts. Replace the cap as required.
- Clean all dirt and debris from the radiator, cooler and engine area.
- Check the condition of the fan drive belt.
- Check the dust valve in the air cleaner frequently during extreme dust conditions.
- Use lubricants of the correct viscosity. (Refer to page **6-5**).

Machine operation

Operating instructions

⚠ WARNING

Misuse hazard!
Follow the operating instructions in this chapter. Any other practice that has not received the prior approval of the manufacturer is considered to be strictly forbidden.
Failure to comply could result in death or serious injury.

W0281A

Watch carefully and make sure you are aware of places where other people are working in your work area. Keep all other people away from the machine. Serious injury can result if these instructions are not followed.

Take note of the locations of pipes/cables before starting work. Electrical cables, gas and water pipes and other underground installations can cause serious injury.

Modify your driving to suit working conditions (sloping or rough ground), the nature of the ground and weather conditions.

On steeply sloping ground, keep engine at maximum speed.

When travelling at right angles to the slope, move on to the slope at low speed. Never reduce engine speed when travelling down slopes.

Holes, obstacles, debris and other danger risks in the working area can cause serious injury. Inspect and note all possible risks before driving the machine in a new working area.

Do not work near overhead high-voltage electric lines without checking beforehand that all necessary measures have been taken to respect the minimum distances:
Less than 57 000 volts: **3 m** (**9.8 ft**).
More than 57 000 volts: **5 m** (**16.4 ft**).

Never hit or push material with the sides of the bucket.

Never sweep the ground with the bucket to level rubble.

When operating the control levers, a whistling sound will be heard if the control lever is held in position while the corresponding cylinder is at the end of its stroke. In this case release the control lever.

When ditching along the edge of a road, it may be necessary to change the attachment offset in relation to the machine. Check from time to time and correct if necessary.

If earth or mud stays stuck inside the bucket, open and close the bucket several times so as to loosen the earth or the mud.

After work, remove any mud and clean the machine.

When operating the attachment, take care that the bucket does not hit the dozer blade (if equipped).

Take care not to hit the dozer blade (if equipped) against rocks.

When using the upperstructure swing, never change the direction of swing too suddenly.

If the operation of the dozer blade (if equipped) is not necessary, always make sure that it is in maximum raised position.

During filling in operations, operate the two travel levers with your left hand while operating the dozer blade control lever (if equipped) with your right hand.

When climbing up a slope, place the bucket about **40 cm** (**15.7 in**) above the ground. When travelling down a slope it is recommended to place the bucket on the ground to prevent the machine from sliding.

Avoid turning the machine on steep slopes.

Never swing the upperstructure on slopes of **15 °** in the direction of travel or **10 °** at right angles to the direction of travel.

The following operations are likely to damage the machine. You are therefore advised to avoid them:

- Excavation using the weight of the machine as a force of impact.
- Excavation using the machine's travel force.

Operation

ATTENTION: *Do not operate the engine with the machine at **35 °**. The engine or hydraulic devices may be damaged.*

The maximum slope climbing ability is **35 ° 70 %**. This value varies depending on the track type and the road surface, limit travelling to slopes of **30 °** or less.

1. Sit in the operator's seat and adjust it so that all the controls are readily accessible then fasten your safety belt.
2. Make sure the cab door is firmly latched in the open or closed position.
3. Sound the horn.

4. Start the engine, taking into consideration the prevailing weather conditions.
5. Check all indicator lamps and gauges are operating correctly.
6. Lower the function cancellation lever.
7. Try out all the controls in a safe, open area.

STOPPING THE UNIT

Stopping the engine

1. Lower the attachment and the dozer blade (if equipped) until it is resting on the ground.
2. Turn the engine throttle button **(1)** to low idle position and let the engine run for 5 minutes or so.

NOTICE: *In cold weather, let the engine run for about 10 minutes at idle speed.*

NOTICE: *Always let the engine run at idle before switching off completely, except in emergency situations.*

3. Turn the ignition key **(2)** to the **"Off"** position.

NOTE: *To activate the anti-theft protection when stopping the engine, (refer to page **4-4**).*

NOTICE: *If the engine is to be shut down for a considerable length of time, refer to page **4-46**).*

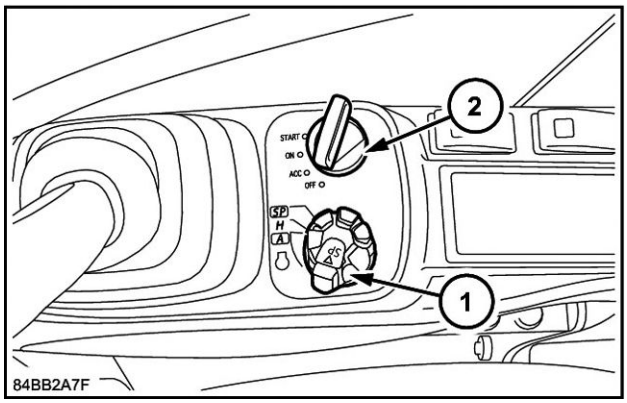

84BB2A7F 1

In the event of an emergency

In the event of an emergency or if it is not possible to stop the engine using the ignition key, press the emergency shut-down switch on the left-hand control arm.

ATTENTION: *This switch should only be used in case of an emergency. Do not use it on a day-to-day basis to stop the engine.*

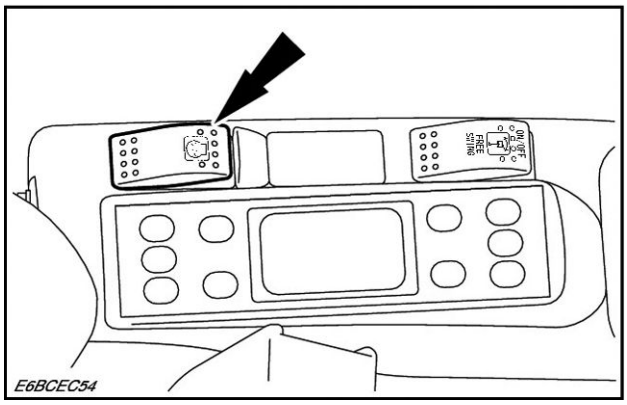

E6BCEC54 2

MOVING THE UNIT

Machine travel

⚠ WARNING

Controls can be reversed!
In the normal travel position, the operator's compartment is above the idler wheels and the travel reduction gears are to the rear of the upper structure. If the upper structure is turned 180 degrees in relation to the undercarriage, the controls are reversed.
Failure to comply could result in death or serious injury.

W0289A

ATTENTION: *Before undertaking any travel, raise the attachment and the dozer blade (if equipped).*

NOTE: *Travel speed depends on the tilting angle of the travel control levers and pedals and the speed travel mode selected.*

NOTE: *The different travel configurations described hereafter are with the travel reduction gears to the rear of the upperstructure.*

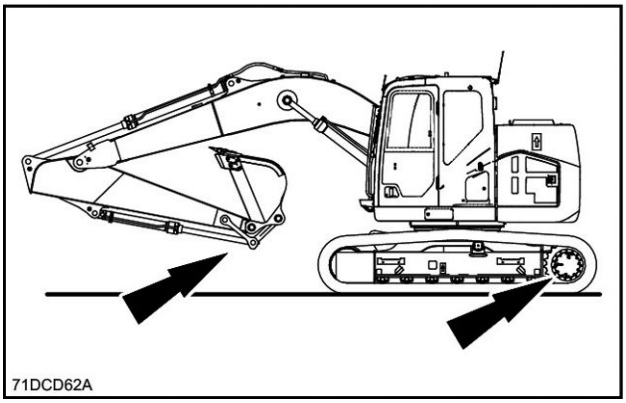

71DCD62A 1

Travel alarm

The travel alarm sounds continuously or for 10 seconds, depending the position of the switch. (Refer to page **3-58**).

Straight line travel (forward travel)

Press the two pedals (or push the two levers) forward at the same time or press the pedal located on the right.

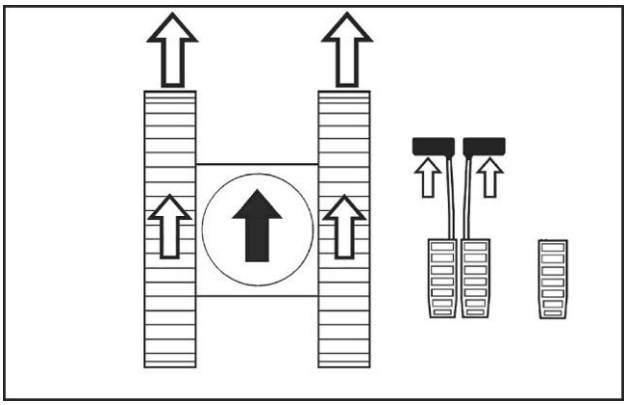

CS98M546Z 2

Straight line travel (reverse travel)

Press the two pedals (or push the two levers) rearward at the same time.

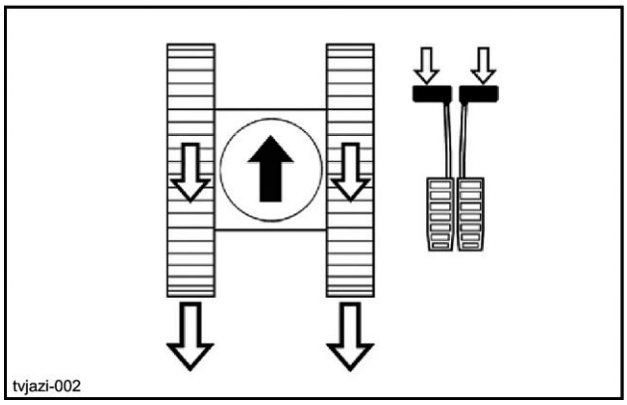

TVJAZI-002 3

Turning to the left (forward travel)

Simply press the right-hand pedal or the right-hand lever forward.

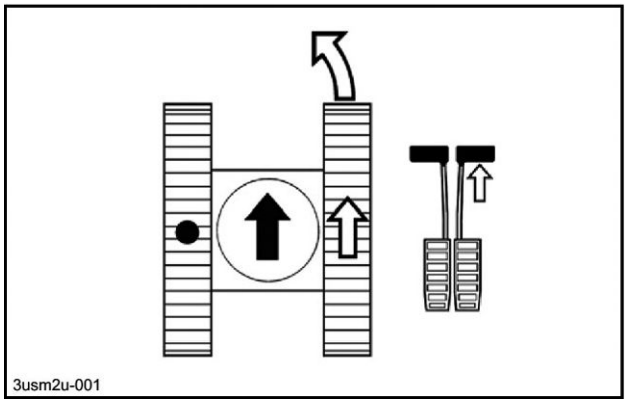

3USM2U-001 4

Turning to the right (forward travel)

Simply press the left-hand pedal or the left-hand lever forward.

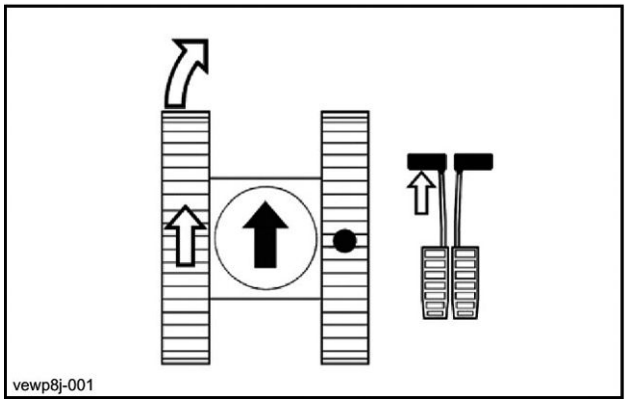

VEWP8J-001 5

Turning to the left (reverse travel)

Simply press the right-hand pedal or the right-hand lever rearward.

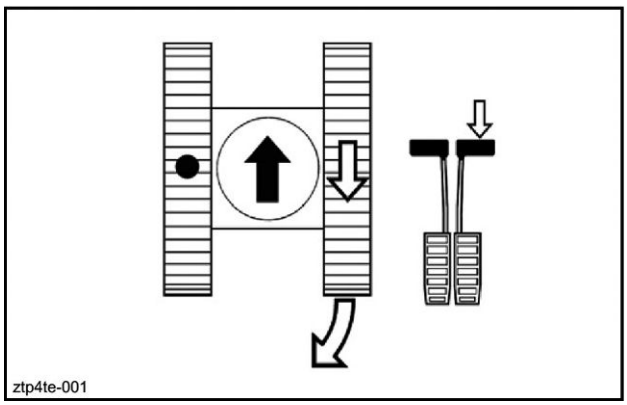

ZTP4TE-001 6

Turning to the right (reverse travel)

Simply press the left-hand pedal or the left-hand lever rearward.

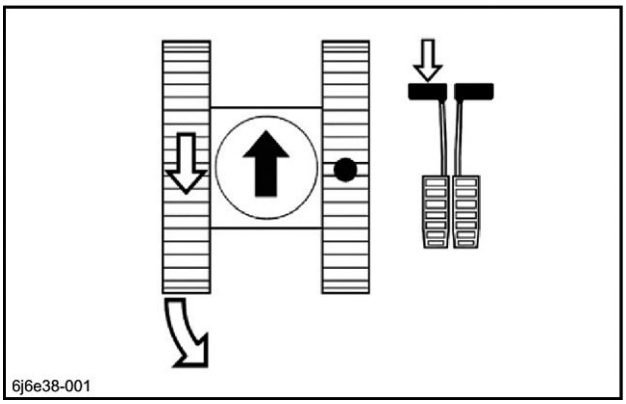

6J6E38-001 7

Turning on the spot, to the right

Press the left-hand pedal or the left-hand lever forward and at the same time press the right-hand pedal or the right-hand lever rearward.

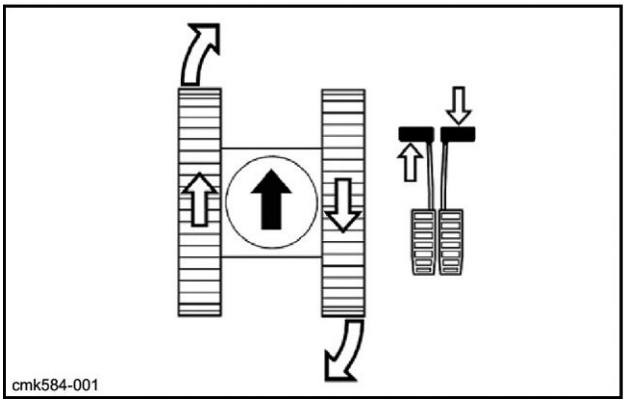

CMK584-001 8

Turning on the spot, to the left

Press the right-hand pedal or the right-hand lever forward and at the same time press the left-hand pedal or the left-hand lever rearward.

ATTENTION: *Turning on the spot cannot be done if high speed travel is selected.*

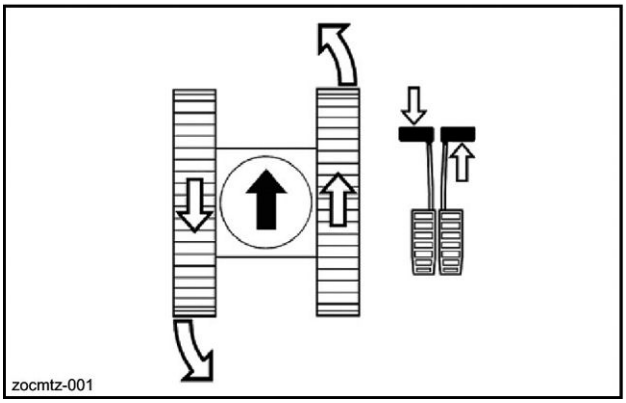

ZOCMTZ-001 9

Gradual turn on the move

Press one of the pedals or one of the levers and, at the same time, press the other pedal or the other lever in the same direction, but slightly harder.

Stopping travel

To come to a complete halt, simply release the levers or pedals and they will return to neutral.

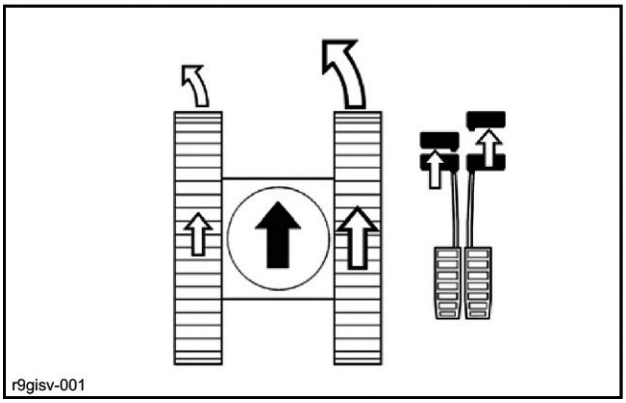

R9GISV-001 10

Handling the machine

⚠ WARNING

Improper operation or service of this machine can result in an accident.
Assign a supervisor to direct worksite operations. Agree on all safety measures, procedures, and suitable hand signals.
Failure to comply could result in death or serious injury.

W0287A

⚠ WARNING

Crushing hazard!
The lifting systems must be operated by qualified personnel who are aware of the correct procedures to follow. Make sure all lifting equipment is in good condition, and all hooks are equipped with safety latches.
Failure to comply could result in death or serious injury.

W0256A

⚠ WARNING

Crushing hazard!
This operation may be dangerous. You are advised to wear suitable clothing and respect all relevant safety messages.
Failure to comply could result in death or serious injury.

W0283A

⚠ WARNING

Hazard to bystanders!
ALWAYS make sure the work area is clear of bystanders and domestic animals before starting this procedure. Know the full area of movement of the machine. Do not permit anyone to enter the area of movement during this procedure.
Failure to comply could result in death or serious injury.

W0245A

Retract the attachment, bucket and arm cylinders fully extended then place the attachment on the ground. Shutdown the engine and leave the operator's compartment.

ATTENTION: *Before handling the machine, make sure the slings are in perfect condition and that they are capable of supporting the weight of the machine. (Refer to page* ***8-5****).*

ATTENTION: *It is imperative to use the sling points indicated on the machine decals. (Refer to page* ***2-8****).*

NOTICE: *The machine must be handled very slowly and horizontally.*

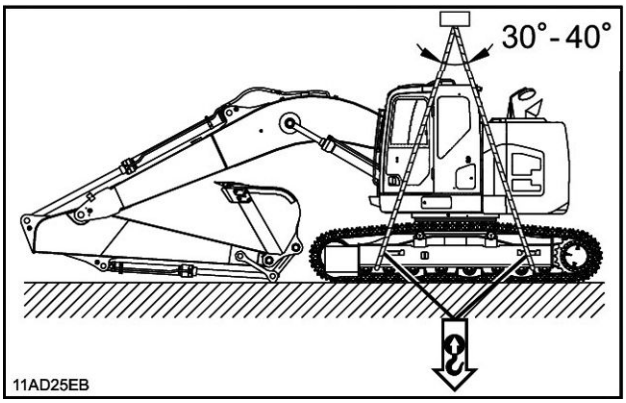

11AD25EB 1

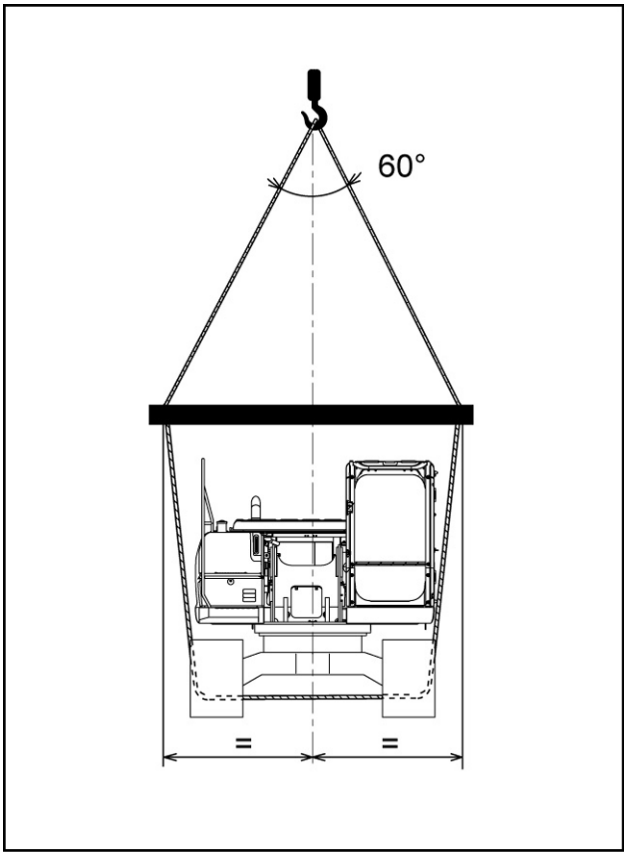

3OS524-002 2

Load handling

⚠ WARNING

Crushing hazard!
During load handling operations, it is very important to adhere strictly to the instructions given in this manual and local legislation.
Failure to comply could result in death or serious injury.

W0257A

ATTENTION: *This machine is not a crane. Be very careful when you lift a load.*

NOTICE: *The loads given are valid for the total working range height at the reach point indicated.*

The load handling chart (located in the cab) shows the different permitted loads which can be lifted, depending on the reach and the type of attachment on the machine.

The machine must be on a flat level, hard surface.

Only the load lift eye on the bucket may be used.

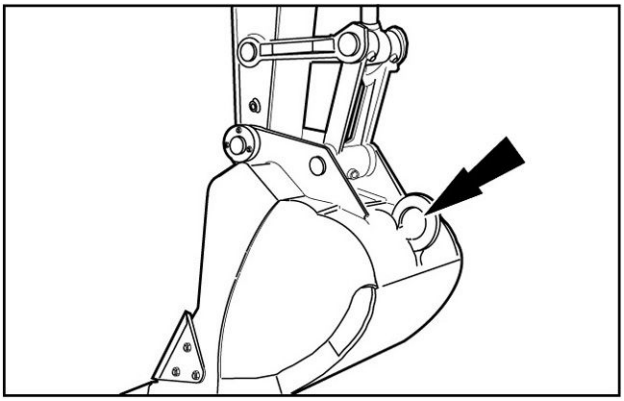

CT10D001A 1

If this machine is to be used to lift loads, for safety purposes, it is recommended that the machine is properly equipped. Contact your CASE CONSTRUCTION dealer and install a Hose Burst Check Valve on your machine's boom cylinders. This system prevents the sudden lowering of the load in the event of a failure of a hydraulic hose, line, or fitting in the boom hydraulic system. Such a failure can cause personal injury or death.

- Know and understand each signal from the signal person before you start.
- Always know the location of all persons in your work area before you start.
- Make certain there is no damage to the lifting device and rigging parts.
- Make certain the lifting device has the appropriate tensile strength for the load being lifted.
- Do not exceed either the radius or the height restrictions shown on the lift capacity charts posted in the cab.
- Be careful to balance the load correctly.
- Always move the load slowly. Do not move the load over the top of persons. Keep all persons away from the load.
- When the load is raised, keep all persons away until the load is placed on blocks or on the ground.

ATTENTION: *It is extremely dangerous if the load lifted begins to swing. The upper structure should be centered over the load to help prevent dangerous swinging.*

Handling the load with the quick coupler (optional)

The load with the quick coupler must be handled with the bucket cylinder rod completely extended.

ATTENTION: *Maintain this position throughout the load handling operation.*

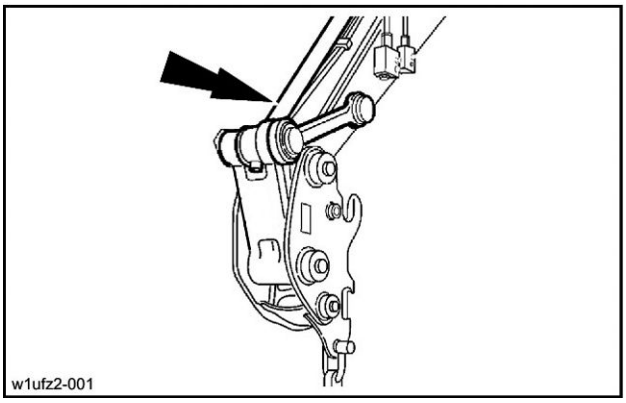

W1UFZ2-001A 2

The handling eye must be able to be seen from the cab throughout the load handling operation.

ATTENTION: *It is strictly forbidden to use the front or rear fixing points* ***(1)*** *of the quick coupler to handle the load.*

NOTE: *The quick coupler eye can be used for handling loads up to* ***10 t****.*

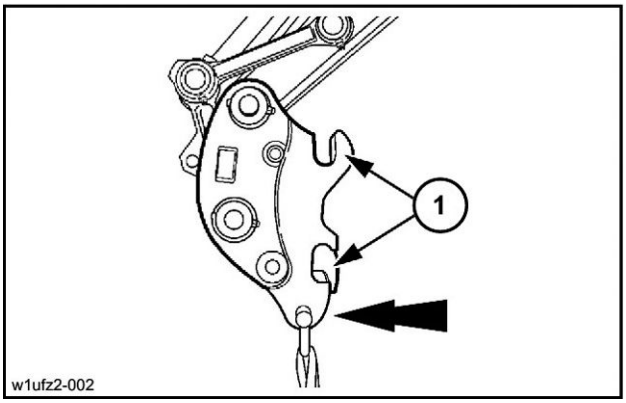

W1UFZ2-002B 3

Operating the machine

Operating the machine in water

Make sure that the bottom of the stream, or stretch of water in which you will work, can support the weight of the machine.

Only the undercarriage must be below water level. The maximum water level can be up to the height of the tracks is **0.80 m** (**31.50 in**).

ATTENTION: *Never work in water if the water level is higher than the tracks.*

Before working in water, grease the attachment linkage, dozer blade (if equipped), turntable bearing and turntable bearing teeth generously.

ATTENTION: *Do not operate in a fast flowing stream.*

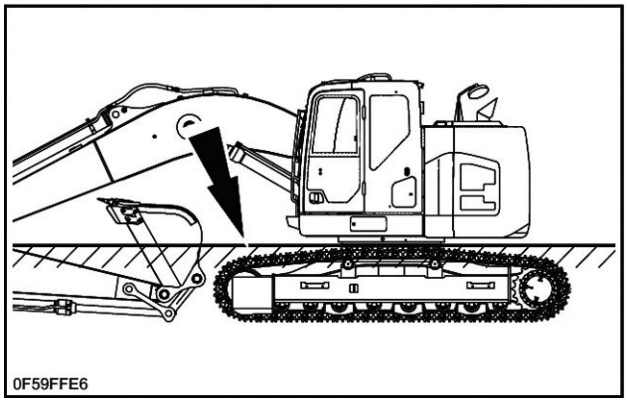

0F59FFE6 1

Operating the machine on sloping ground

⚠ WARNING

Driving hazard!
Hillside operations can be dangerous. Rain, snow, ice, loose gravel, or soft ground, etc. can change the ground conditions. You must make a judgment if it is safe to operate your machine on any hillside or ramp.
Failure to comply could result in death or serious injury.

W0144A

⚠ WARNING

Overturning hazard!
Before parking the machine, make sure the ground is stable. Plan the worksite so that the ground is flat, hard, and level.
Failure to comply could result in death or serious injury.

W0258A

During hillside operations, be extra careful.

- Make sure that the low speed travel is selected.

When digging on a slope, avoid swinging the upperstructure towards the bottom of the slope with the backhoe bucket full.

- Always keep the travel reduction gears pointing down towards the bottom of the slope.
- Always travel in the same direction as the slope, to prevent the machine from turning over.

Operating the backhoe bucket

Filling

Fill the backhoe bucket by manoeuvring the arm. Keep the bottom of the backhoe bucket parallel to the cut. The backhoe bucket teeth and blade must cut the ground like the blade of a knife. The depth of dig varies depending on the type of material.

Excavating method

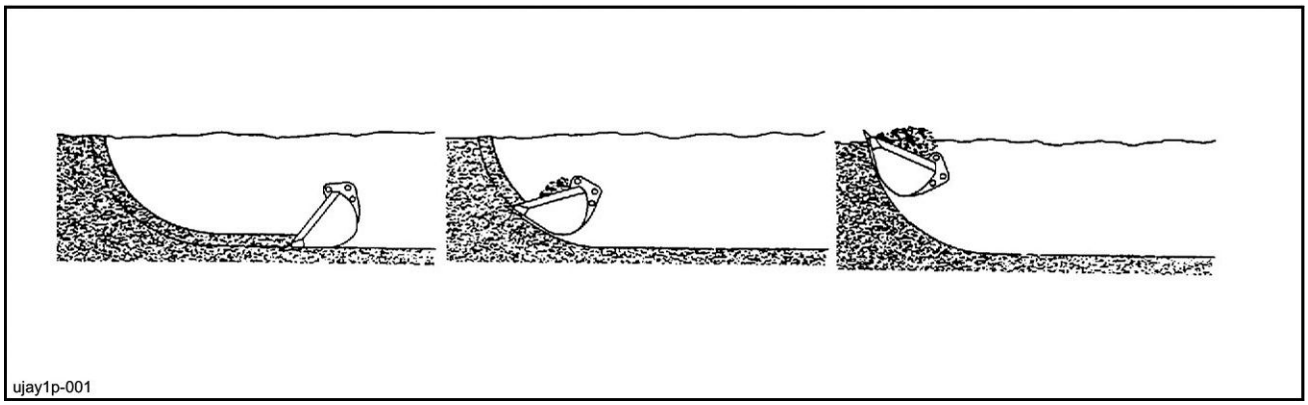

UJAY1P-001 2

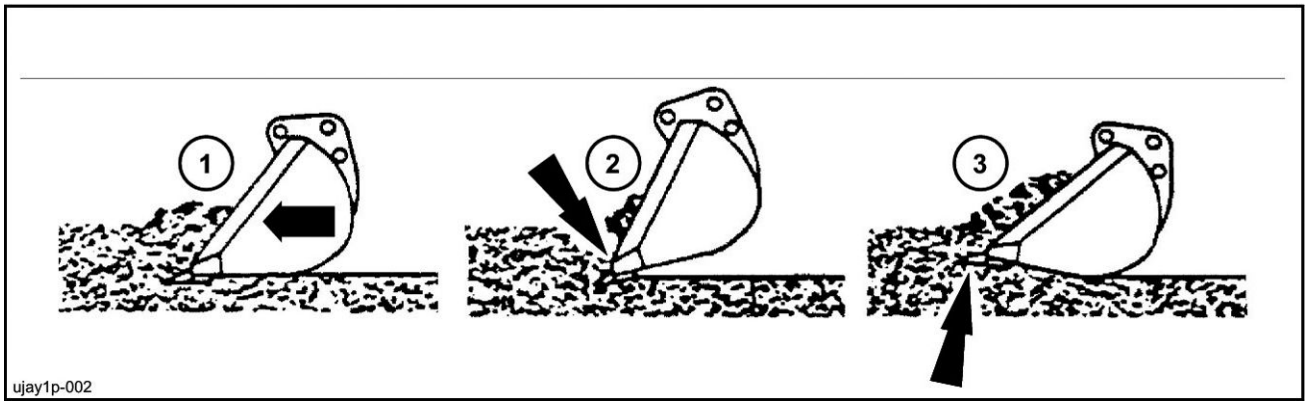

UJAY1P-002 3

1. Correct
2. Incorrect. The backhoe bucket will dig in and cause a stall.
3. Incorrect. The backhoe bucket is pushed upwards. This will also increase the cycle time.

Operating the offset boom (if equipped)

When the arm is operated, the position of the rear arm cylinder changes. Be careful not touch hoses or pipes on the attachment.

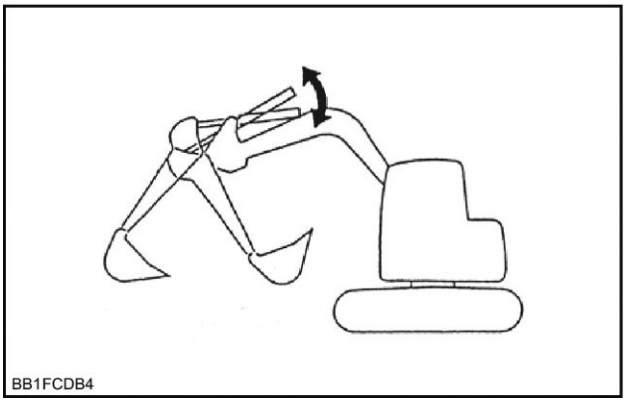

BB1FCDB4 4

Quick coupler (optional)

⚠ WARNING

Crushing hazard!
Never put your hands inside the quick coupler when the engine is running. Turn off the engine and wait for all movement to stop.
Failure to comply could result in death or serious injury.

W0252A

Install the quick coupler on the arm and on the connecting rod using the CASE CONSTRUCTION linkage pins **(1)** supplied and then make the supply line connections.

NOTICE: *The quick coupler can be used in conjunction with hydraulic breakers, but is not designed to withstand excessive vibration over long periods of the time. It is therefore recommended to remove the quick coupler, to reduce the risk of premature wear, failures or breakage. If you do decide to use a hydraulic breaker, always orientate the breaker towards the machine and never use it as a lever, as the stress would be borne by the quick coupler cylinder.*

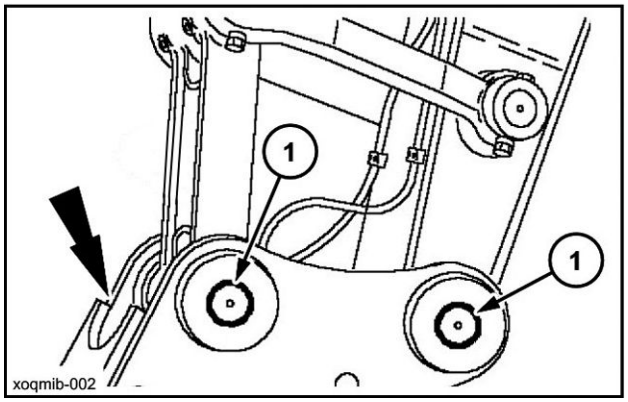

XOQMIB-002 1

Quick tool installation and removal

⚠ WARNING

Hazard to bystanders!
ALWAYS make sure the work area is clear of bystanders and domestic animals before starting this procedure. Know the full area of movement of the machine. Do not permit anyone to enter the area of movement during this procedure.
Failure to comply could result in death or serious injury.

W0245A

NOTICE: *This quick coupler is designed to be used with CASE CONSTRUCTION buckets. This being said, other buckets may be used, provided the diameter of the pins and the width between the bucket lugs are modified to meet the dimensions needed to fit the quick coupler (pins, washers, bushings, etc.). Consult your CASE CONSTRUCTION Dealer.*

Installation

1. Make sure the tool to be installed is laying safely on flat, level ground and that it is fitted with the pins supplied with the quick coupler.

2. Place the switch **(1)** in unlocking position. The audible alarm device will sound. (Refer to page **3-56**).

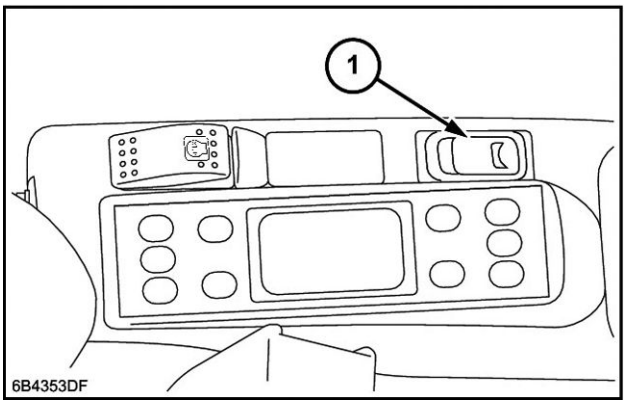

6B4353DF 2

3. Operate the arm and bucket controls so that the arm is practically vertical, sloping slightly towards the cab, to release the safety device. Extend the bucket cylinder rod completely and maintain the hydraulic pressure so that the latching hook retracts.

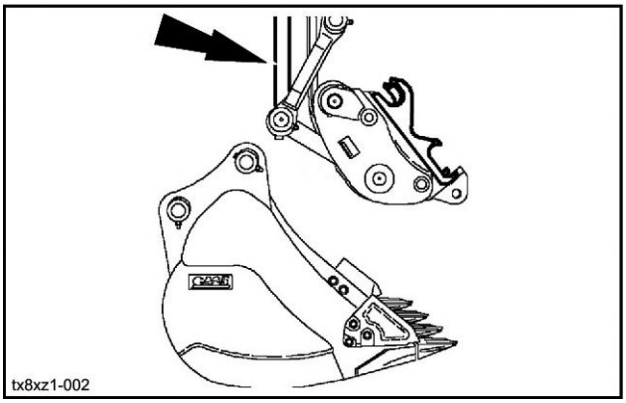

TX8XZ1-002A 3

4. Operate the arm control lever so as to bring the quick coupler hook **(2)** around the tool pin **(3)**.

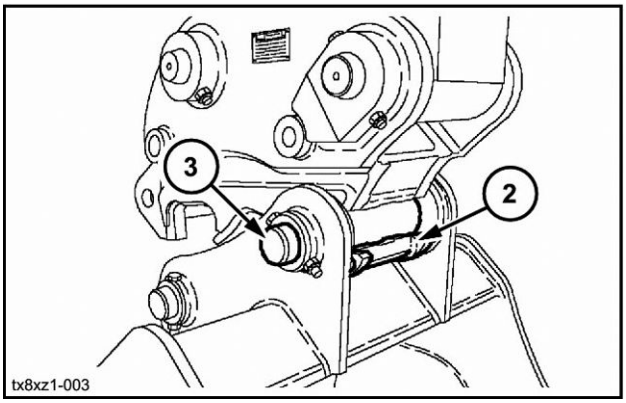

TX8XZ1-003 4

5. Operate the bucket control lever so that the pin is completely engaged in the quick coupler hook.

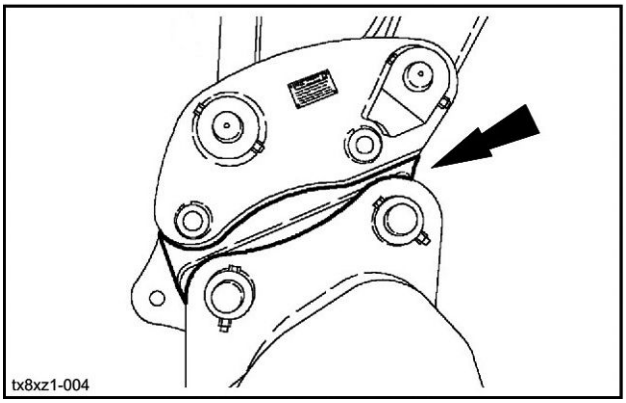

TX8XZ1-004A 5

6. Raise the arm and operate the bucket control to extend the bucket cylinder rod completely.

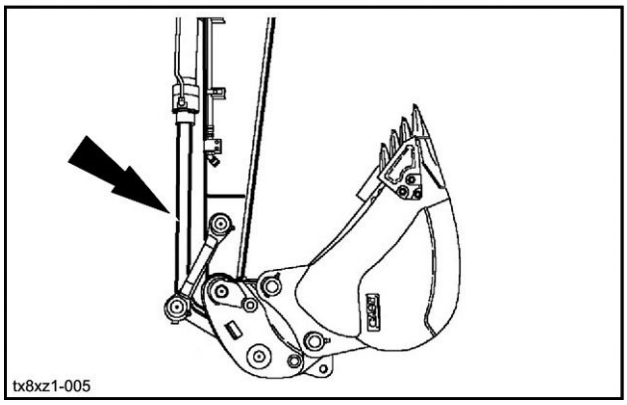

TX8XZ1-005A 6

7. Place the switch **(1)** in the locked position. The audible alarm device will cease functioning. (Refer to page **3-56**).

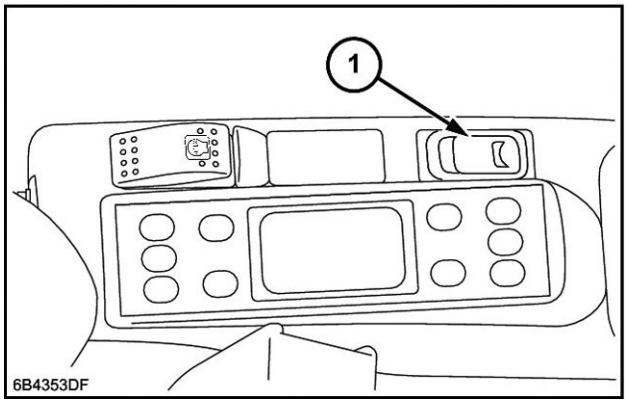

6B4353DF 7

8. Maintain the pressure in the bucket cylinder to allow the latching hook to close. Raise the attachment so you can see the bucket pin.

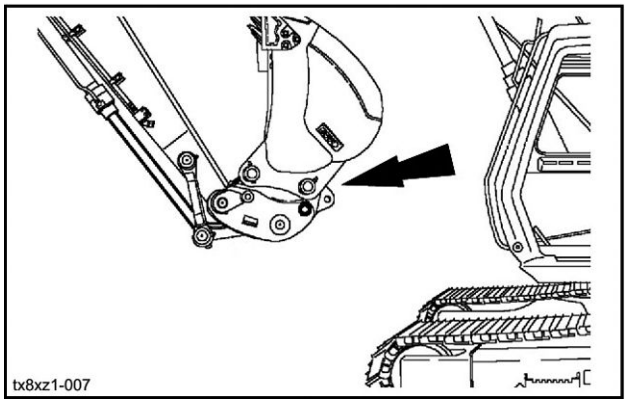

TX8XZ1-007A 8

9. Make sure you can see that the bucket pin is correctly engaged in the latching hook.

   NOTE: *If it is not possible to make a visual check sitting in the operator's seat, get down from the machine and make sure that the tool is correctly connected with the safety device engaged.*

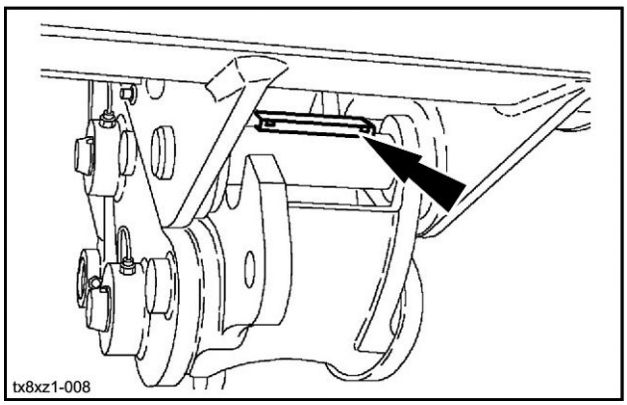

TX8XZ1-008 9

10. Operate the bucket control to retract the cylinder rod and allow the safety device to engage.

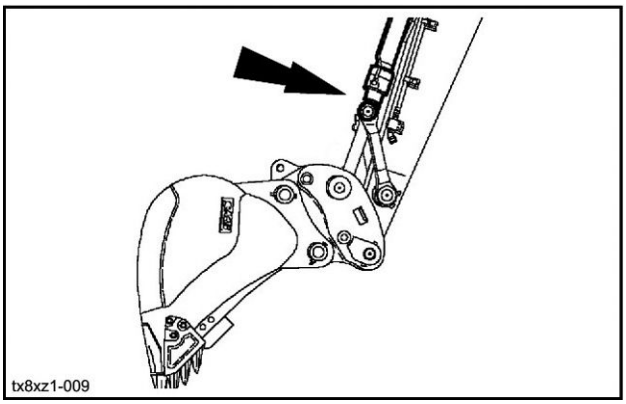

TX8XZ1-009A 10

Disassembly

1. Operate the arm and bucket controls so that the arm is practically vertical, sloping slightly towards the cab, to release the safety device. Extend the bucket cylinder rod completely and maintain the hydraulic pressure so that the latching hook retracts.

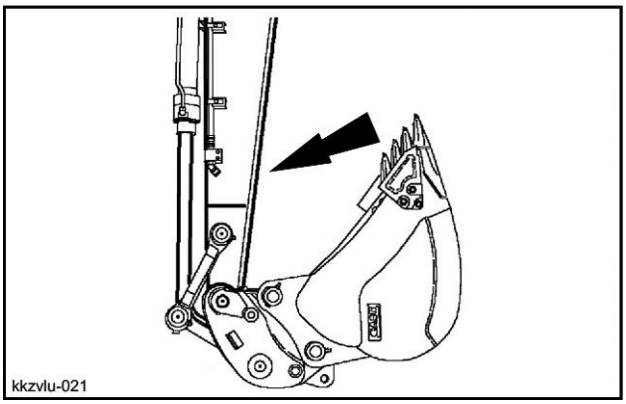

KKZVLU-021A 11

2. Place the switch **(1)** in unlocking position. The audible alarm device will sound. (Refer to page**3-56**).

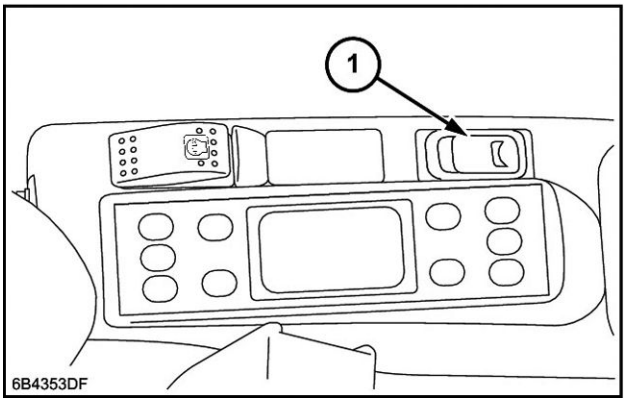

6B4353DF 12

3. Operate the bucket control to lay the bucket safely on flat, level ground.

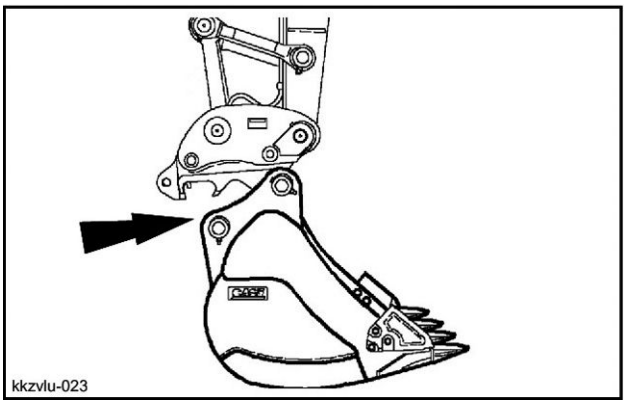

KKZVLU-023A 13

4. Operate the arm control to unhook the tool.

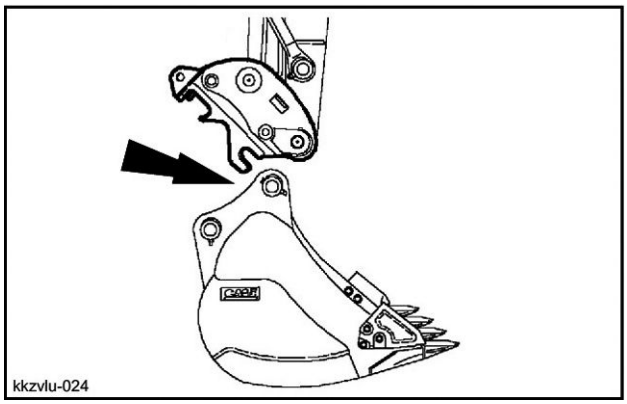

KKZVLU-024A 14

Lowering the attachment in the event of a failure

If the engine breaks down, use the following procedure to lower the attachment:

1. Turn the ignition key to the **“On”** position.

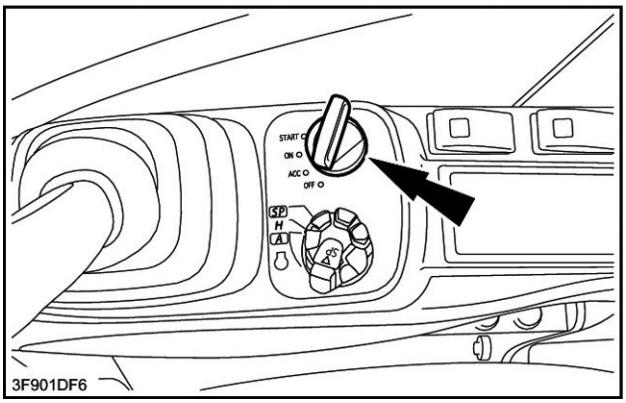

3F901DF6 1

2. Lower the function cancellation lever.

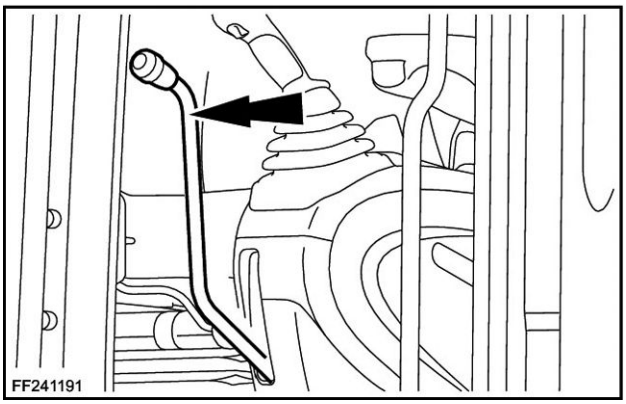

FF241191 2

3. Place the control lever(s) in the position corresponding to the downward movement required.

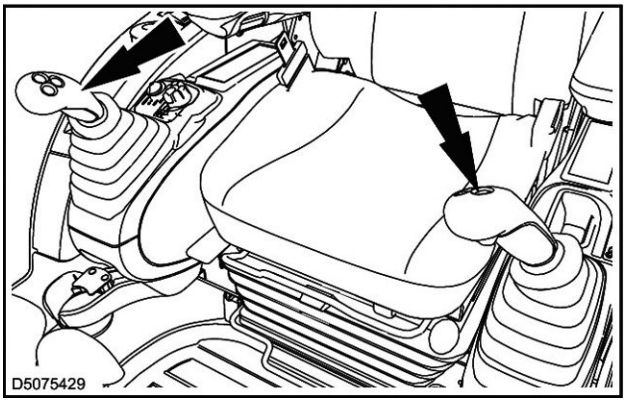

D5075429 3

Adjustment and mounting of rear view mirrors

ATTENTION: *To position the manually adjustable mirrors, get help from a second person. From the operator's seat, tell the second person how to adjust the mirrors.*

On the cab (upper)

Adjust the mirror to see the left rear edge of the machine by sight.
Tightening torque of bolt **(1)**: **71.6 - 91.2 N·m** (**52.8 - 67.3 lb ft**).
(L) dimension: **165 mm** (**6.5 in**).

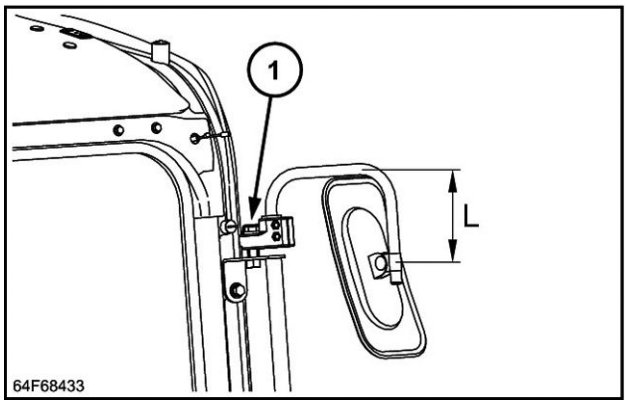

64F68433 1

Tightening torque of bolt to tight the body of the mirror: **4.5 - 5.5 N·m** (**3.3 - 4.1 lb ft**).

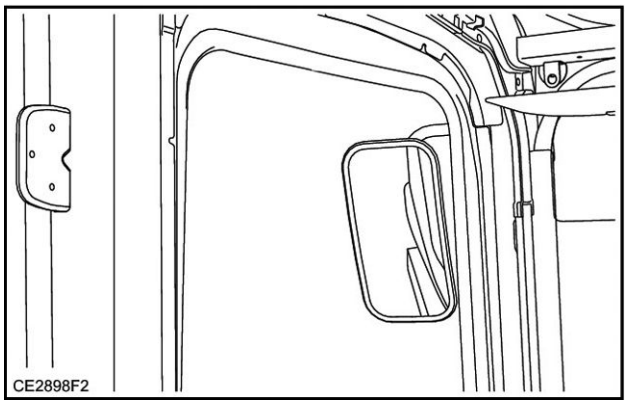

CE2898F2 2

On the cab (lower)

Adjust the mirror to see the right front edge of the machine by sight.
(L1) dimension: **280 mm** (**11.0 in**).
(L2) dimension: **260 mm** (**10.2 in**).

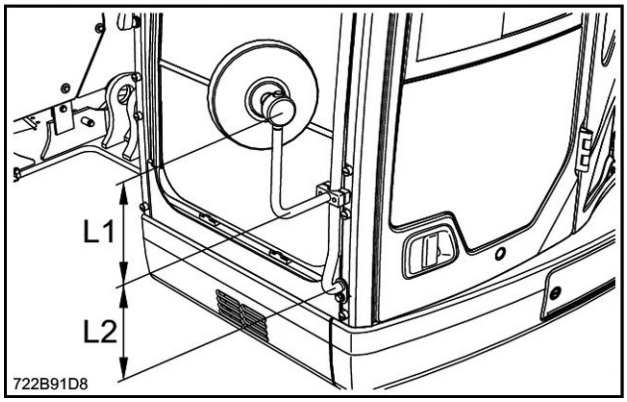

9472A1D5 3

Tightening torque of bolt to tight the body of the mirror: **4.5 - 5.5 N·m** (**3.3 - 4.1 lb ft**).

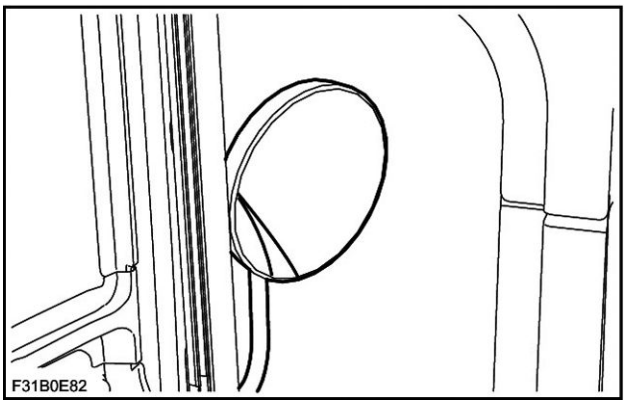

F31B0E82 4

On the upperstructure (front)

Adjust the mirror to see the right front edge of the machine by sight.
(L) dimension: **310 mm** (**12.2 in**).

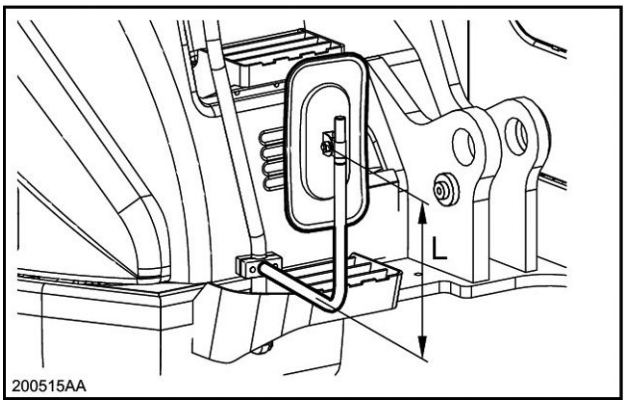

200515AA 5

Tightening torque of bolt to tight the body of the mirror: **4.5 - 5.5 N·m** (**3.3 - 4.1 lb ft**).

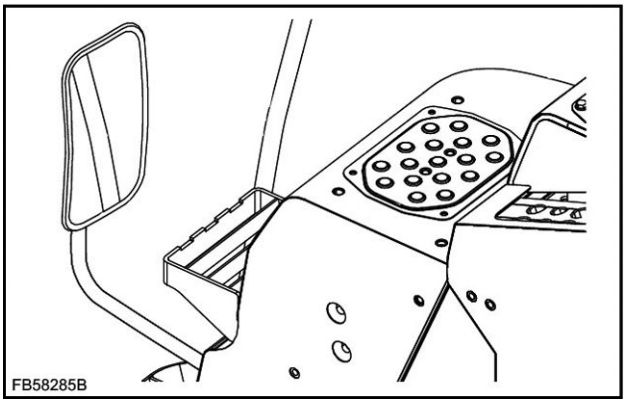

FB58285B 6

On the upperstructure (rear)

Adjust the mirror to see the right rear edge of the machine by sight.
(L) dimension: **280 mm** (**11.0 in**).

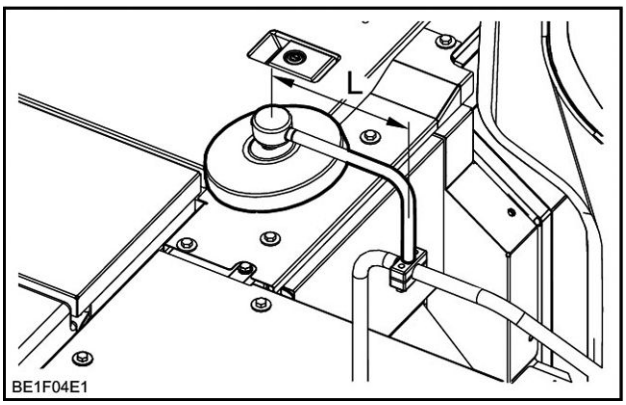

BE1F04E1 7

Tightening torque of bolt to tight the body of the mirror: **4.5 - 5.5 N·m** (**3.3 - 4.1 lb ft**).

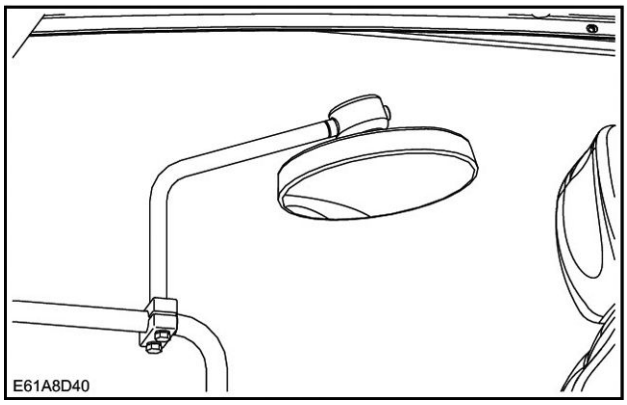

E61A8D40 8

On the counterweight (left)

Adjust the mirror to see the rear of the machine by sight. **(L)** dimension: **455 mm** (**17.9 in**).

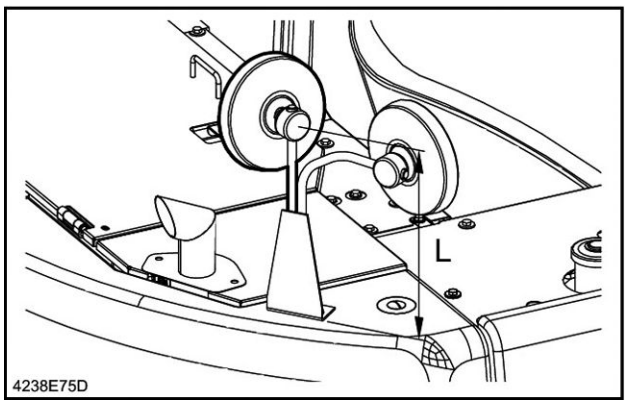

4238E75D 9

Tightening torque of bolt to tight the body of the mirror: **4.5 - 5.5 N·m** (**3.3 - 4.1 lb ft**).

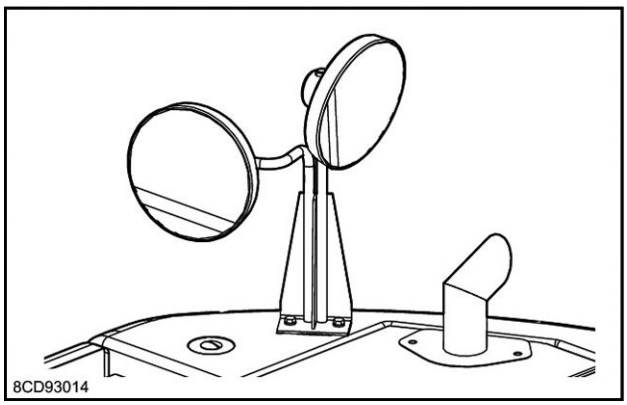

8CD93014 10

On the counterweight (right)

Adjust the mirror to see the rear of the machine by sight. **(L)** dimension: **40 mm** (**1.6 in**).

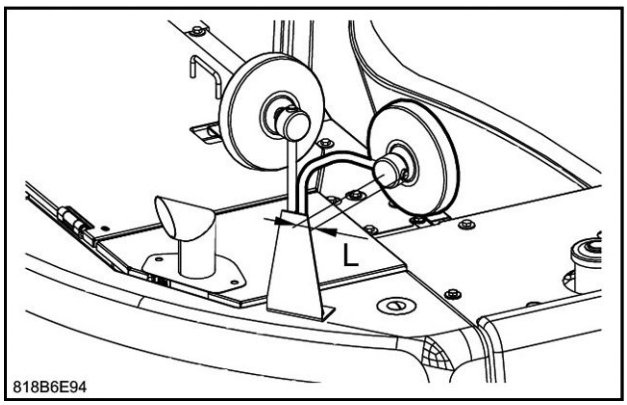

818B6E94 11

Tightening torque of bolt to tight the body of the mirror: **4.5 - 5.5 N·m** (**3.3 - 4.1 lb ft**).

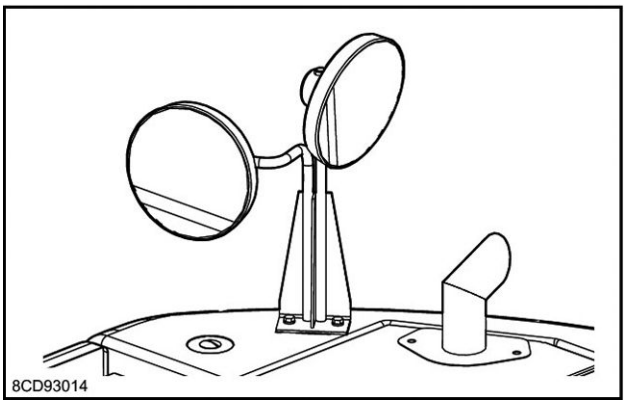

8CD93014 12

Auxiliary hydraulic circuits

Your machine has two types of auxiliary hydraulic circuits. One circuit is for single flow equipment, such as hydraulic breakers. The second type of circuit is designed for dual flow use such as demolition grabs, etc.

Consult your CASE CONSTRUCTION Dealer to select the optional accessory compatible with your machine and to correctly adjust the flow required for its use.

ATTENTION: *To prevent failure or damage to the tool, make sure that you select the correct circuit configuration and flow rate for the tool.*

Hydraulic breaker or single flow hydraulic circuit configuration

Pedal type

1. Make the necessary tool connections and then, using a hexagonal wrench, open the supply valves located at the tip of the arm, left-hand and right-hand side.

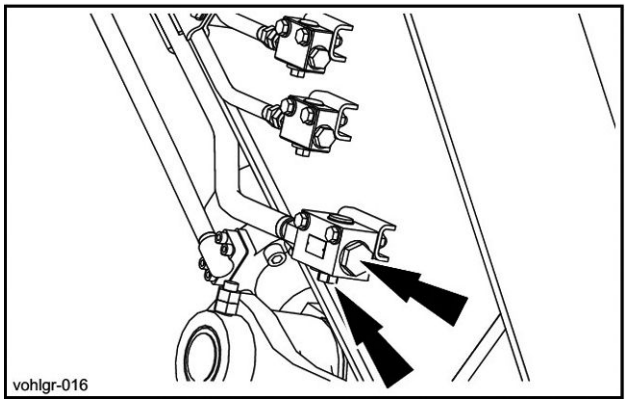

VOHLGR-016 1

2. Switch **(1)** located on the front right-hand console, corresponding to the hydraulic breaker.
   Every time the switch **(1)** is pressed, one of the different types of flow patterns recorded for the pump can be selected. For flow setting method, refer to page **3-27** .

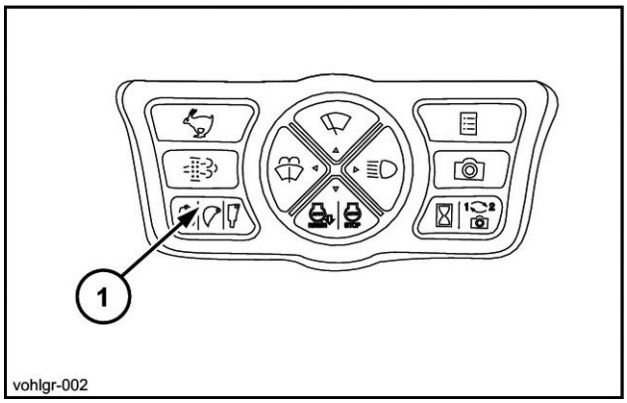

VOHLGR-002 2

3. The icon of the accessory associated with each type of flow displays on the screen.

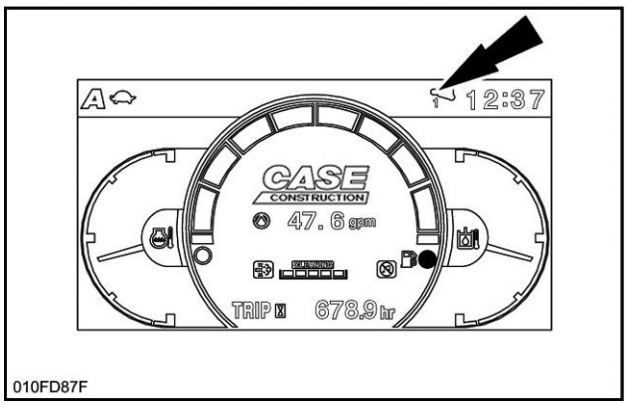

010FD87FZ 3

4. After switch **(1)** has been operated, the set flow willbe displayed for a set amount of time.

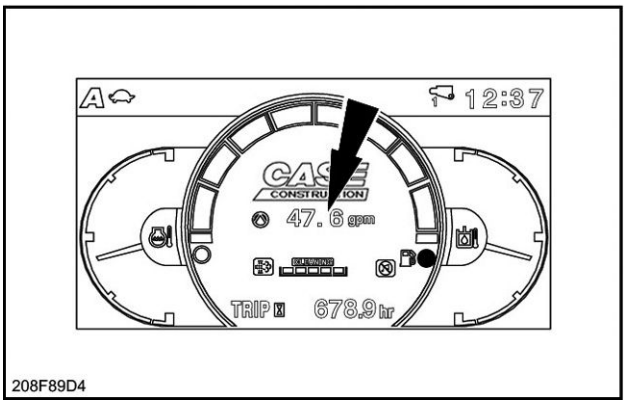

208F89D4Z 4

NOTE: *To prevent failure or damage to the tool, make sure that you select the correct circuit configuration and flow rate and pressure for the tool.*

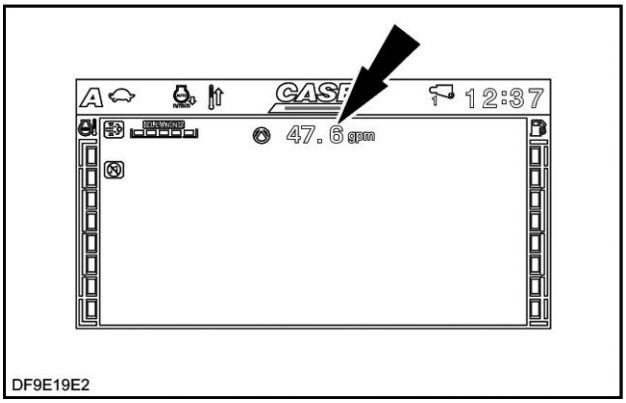

DF9E19E2 5

5. Unlock the pedal and engage the locking pin **(1)**.

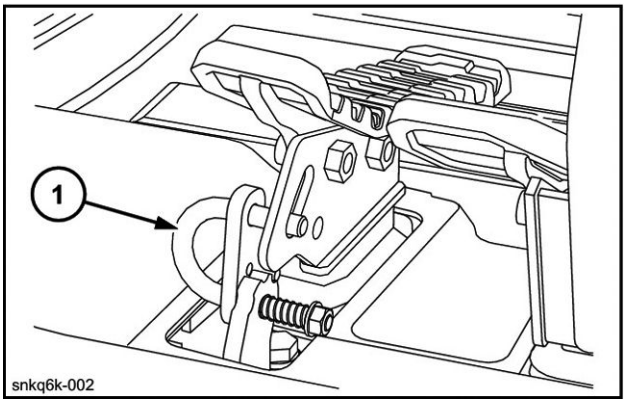

SNKQ6K-002 6

6. Use the control pedal to operate the hydraulic breaker.

ATTENTION: *In Bucket mode, do not carry out operation using auxiliary line. If you do that the warning message "Auxiliary set-up required" will be displayed with buzzer sound. Stop operation immediately and carry out auxiliary set-up.*

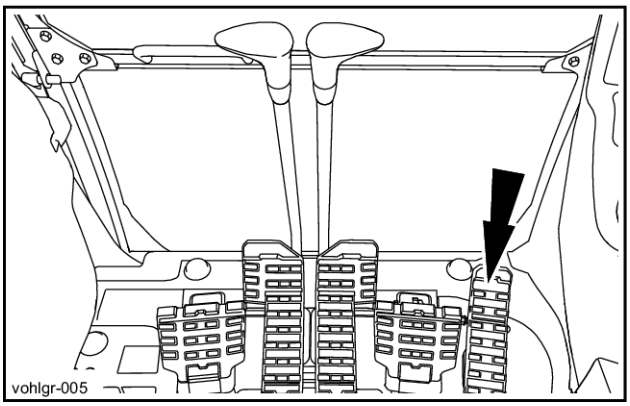

VOHLGR-005 7

7. Use the upper button switch on the right-hand lever to operate the hydraulic breaker.

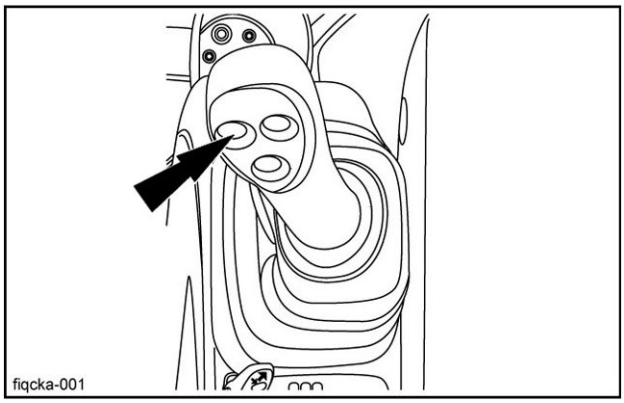

FIQCKA-001A 8

Proportional switch type

1. Make the necessary tool connections and then, using a hexagonal wrench, open the supply valves located at the tip of the arm, left-hand and right-hand side.

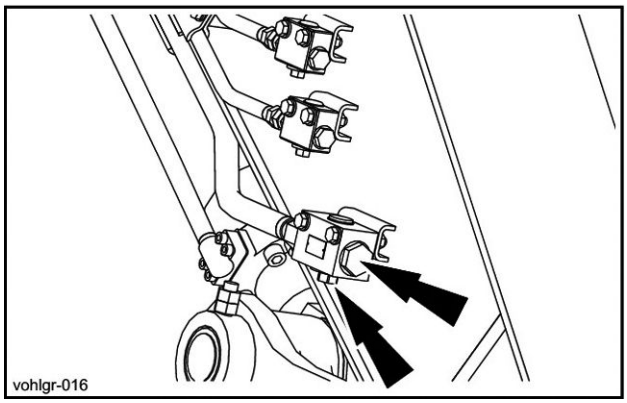

VOHLGR-016 9

2. Switch **(1)** located on the front right-hand console, corresponding to the hydraulic breaker.
   Every time the switch **(1)** is pressed, one of the different types of flow patterns recorded for the pump can be selected. For flow setting method, refer to page **3-27**.

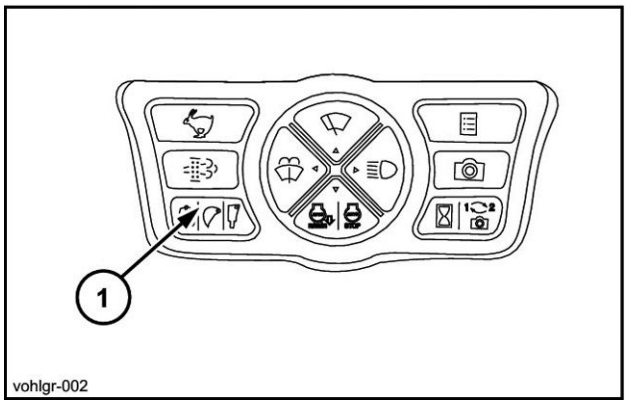

VOHLGR-002 10

3. The icon of the accessory associated with each type of flow displays on the screen.

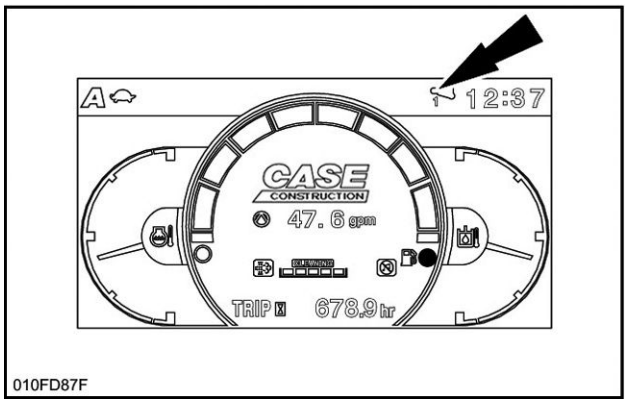

010FD87FZ 11

4. After switch **(1)** has been operated, the set flow willbe displayed for a set amount of time.

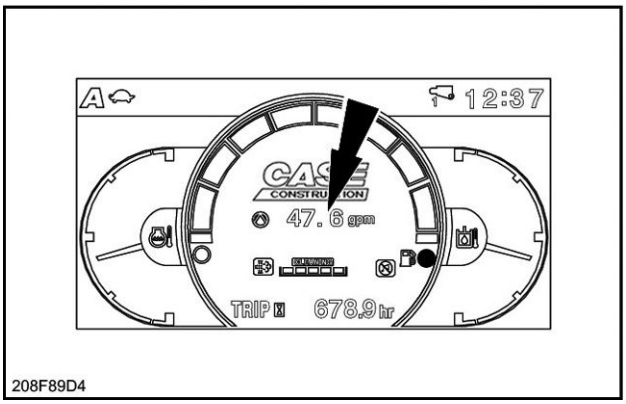

208F89D4Z 12

NOTE: *To prevent failure or damage to the tool, make sure that you select the correct circuit configuration and flow rate and pressure for the tool.*

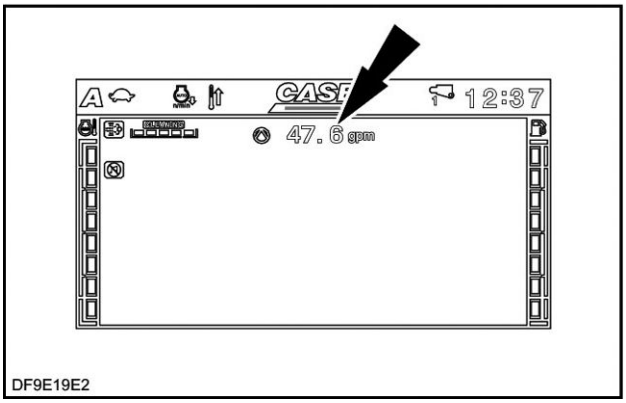

DF9E19E2 13

5. Proportional switch
   (1) = Proportional switch (Option control switch).
   (2) = Option control switch
   (3) = Horn switch
   (4) = Proportional switch (Option control switch)
   (5) = Option control switch
   (6) = Engine idle switch

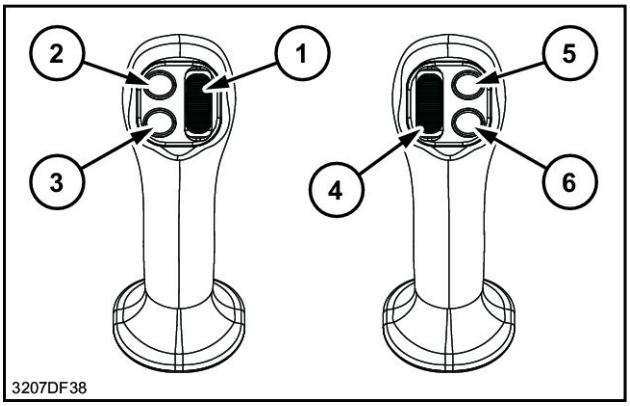

3207DF38 14

6. Use the proportional switch to operate the hydraulic breaker.

NOTICE: *In Bucket mode, do not carry out operation using auxiliary line. If you do that the warning message "Auxiliary set-up required" will be displayed with alarm sound. Stop operation immediately and carry out auxiliary set-up.*

NOTE: *To prevent failure or damage to the tool, make sure that you select the correct circuit configuration and flow rate and pressure for the tool.*

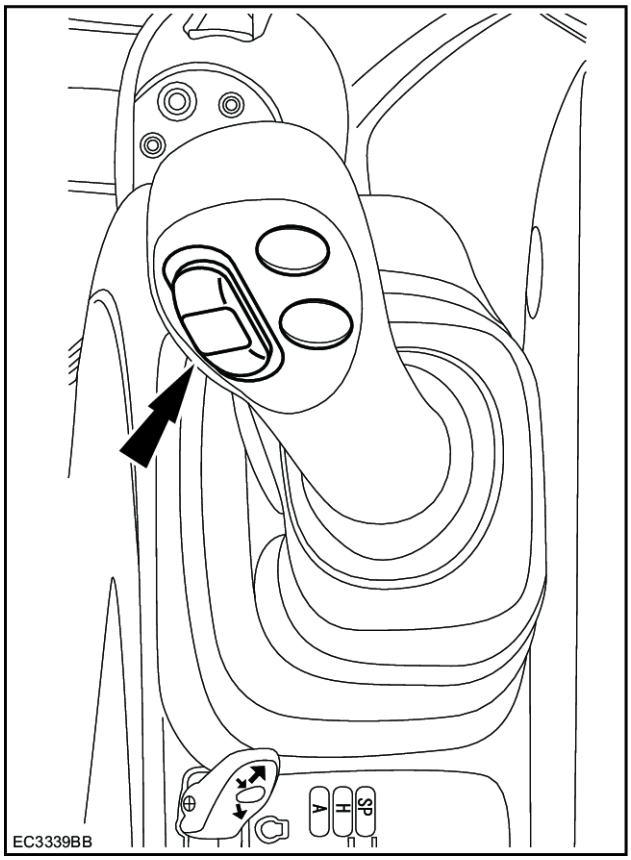

EC3339BB 15

Muti-purpose circuit with pressure adjuster

Pedal type

1. Make the necessary tool connections and then, using a hexagonal wrench, open the supply valves located at the tip of the arm, left-hand and right-hand side.

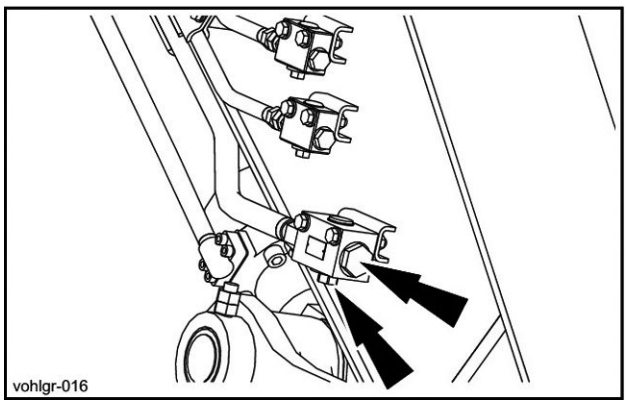

VOHLGR-016 16

2. Switch **(1)** located on the right-hand console upwards, corresponding to the demolition grab.
   Every time the switch **(1)** is pressed, one of the different types of flow patterns recorded for the pump can be selected. For the flow and pressure setting method, refer to page **3-27**.

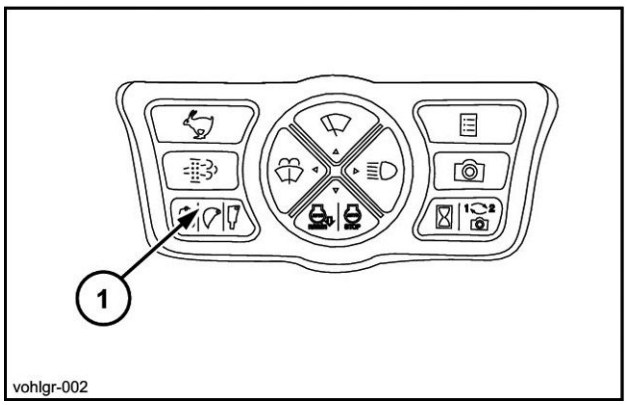

VOHLGR-002 17

3. The icon of the accessory associated to each type of flow appears on the screen.

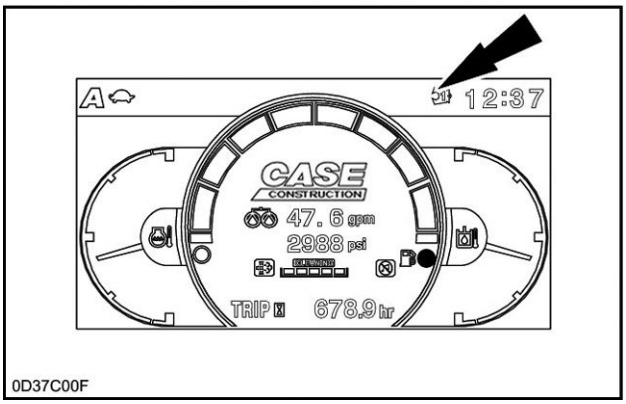

0D37C00FZ 18

4. After switch **(1)** has been operated, the set flow and-pressure will be displayed for a set amount of time.

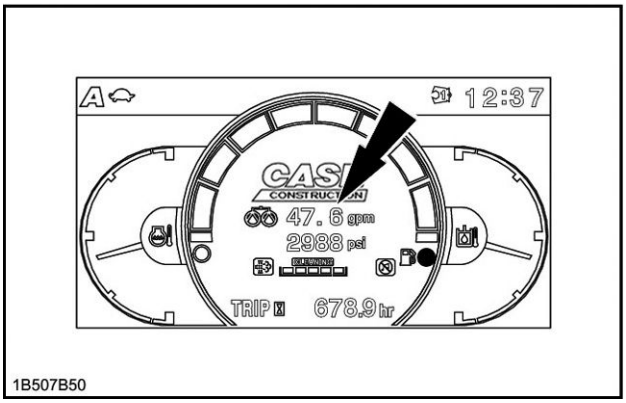

1B507B50Z 19

NOTE: *To prevent failure or damage to the tool, make sure that you select the correct circuit configuration and flow rate and pressure for the tool.*

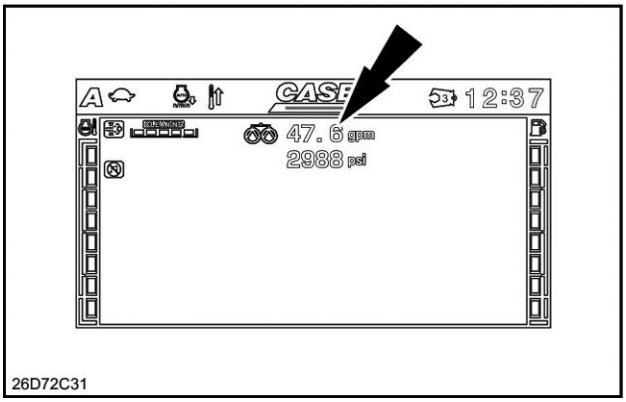

26D72C31 20

5. Unlock the pedal.

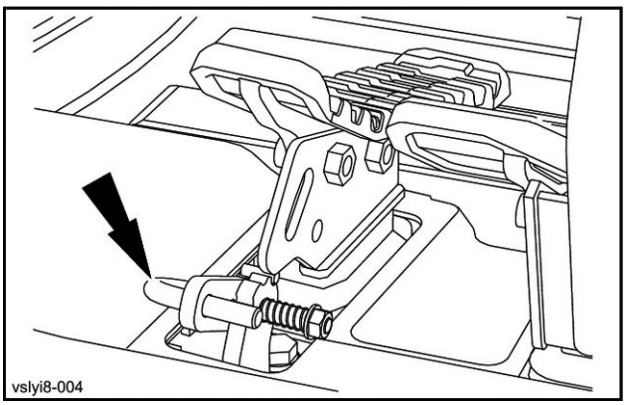

VSLYI8-004 21

6. Use the control pedal to operate the concrete crusher.

NOTE: *To prevent failure or damage to the tool, make sure that you select the correct circuit configuration and flow rate and pressure for the tool.*

ATTENTION: *In bucket mode, do not carry out operation using auxiliary line. If you do that, the warning message "Auxiliary set-up required" will be displayed with intermittent whistle sound. Stop operation immediately and carry out auxiliary set-up.*

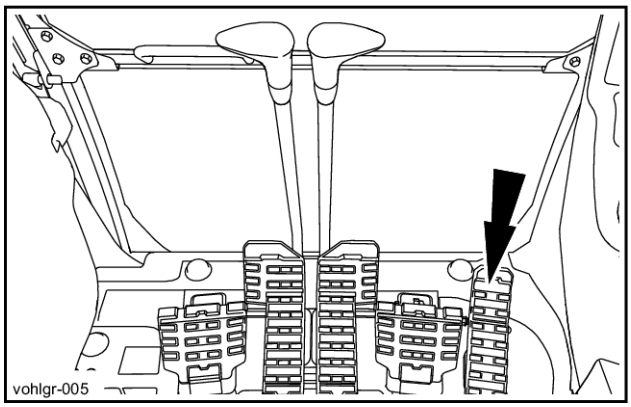

VOHLGR-005 22

Proportional switch type

1. Make the necessary tool connections and then, using a hexagonal wrench, open the supply valves located at the tip of the arm, left-hand and right-hand side.

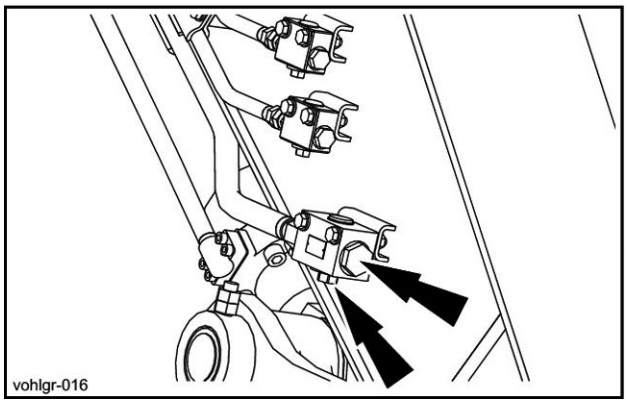

VOHLGR-016 23

2. Switch **(1)** located on the right-hand console upwards, corresponding to the demolition grab.
   Every time the switch **(1)** is pressed, one of the different types of flow patterns recorded for the pump can be selected. For the flow and pressure setting method, refer to page **3-27**.

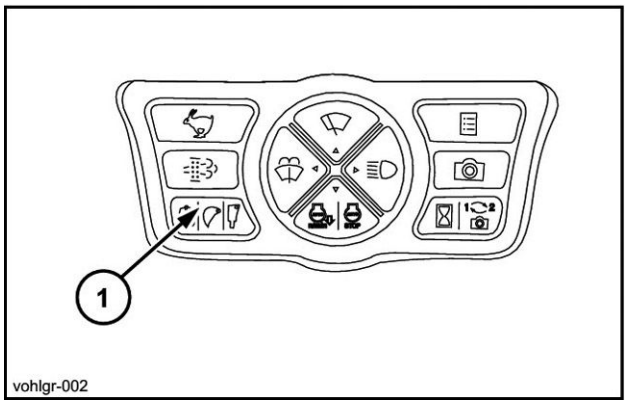

VOHLGR-002 24

3. The icon of the accessory associated to each type of flow appears on the screen.

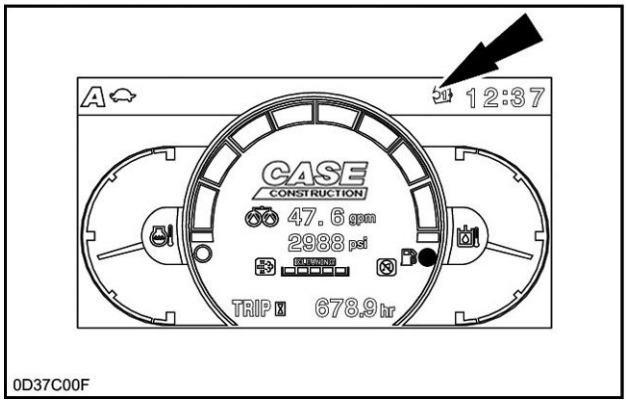

0D37C00FZ 25

4. After switch **(1)** has been operated, the set flow and-pressure will be displayed for a set amount of time.

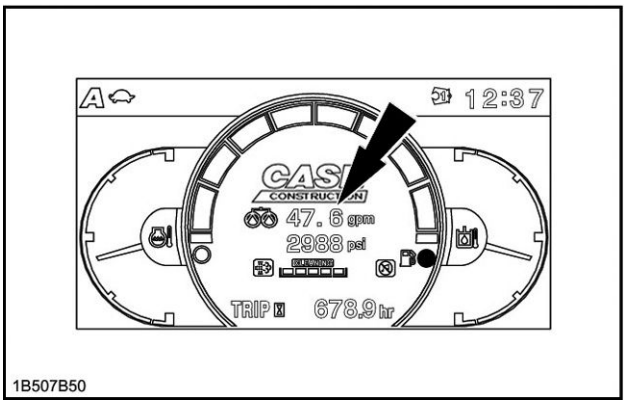

1B507B50Z 26

NOTE: *To prevent failure or damage to the tool, make sure that you select the correct circuit configuration and flow rate and pressure for the tool.*

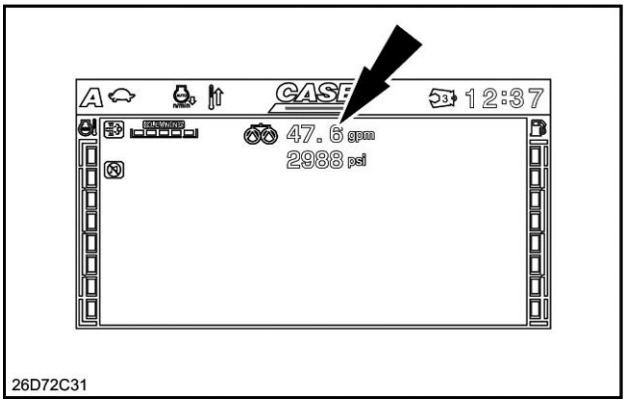

26D72C31 27

5. Proportional switch
   (1) = Proportional switch (Option control switch).
   (2) = Option control switch
   (3) = Horn switch
   (4) = Proportional switch (Option control switch)
   (5) = Option control switch
   (6) = Engine idle switch

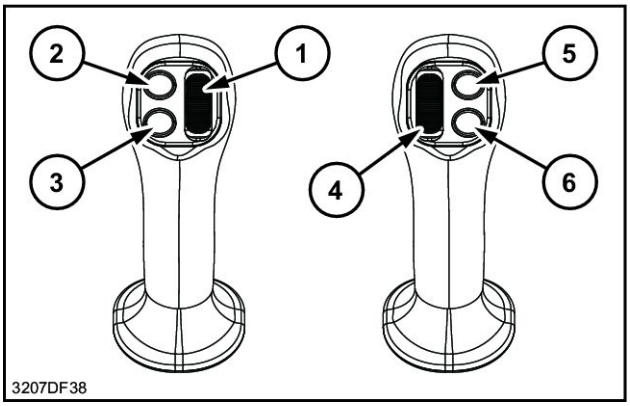

3207DF38 28

6. Use the proportional switch to operate the concrete crusher.

NOTICE: *In Bucket mode, do not carry out operation using auxiliary line. If you do that the warning message "Auxiliary set-up required" will be displayed with intermittent whistle sound. Stop operation immediately and carry out auxiliary set-up.*

NOTE: *To prevent failure or damage to the tool, make sure that you select the correct circuit configuration and flow rate and pressure for the tool.*

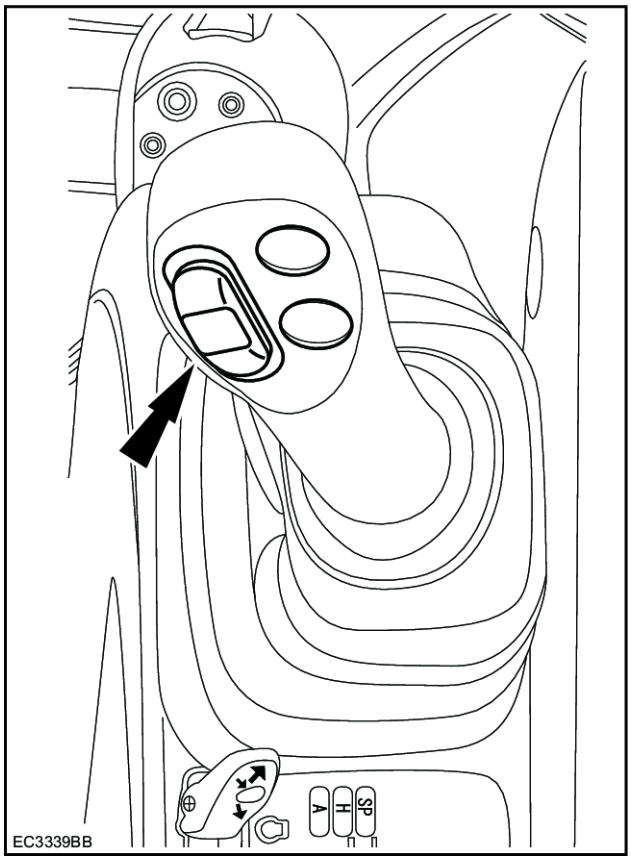

EC3339BB 29

Auxiliary hydraulic circuit flow patterns

Flow patterns can be selected from the 20 shown below.

NOTE: *The number of setting patterns is 10 maximum.*

1 flow	2 flows
126 l/min (27.7 UK gpm)	**252 l/min (55.4 UK gpm)**
117 l/min (25.7 UK gpm)	**242 l/min (53.2 UK gpm)**
108 l/min (23.8 UK gpm)	**234 l/min (51.5 UK gpm)**
97 l/min (21.3 UK gpm)	**223 l/min (49.1 UK gpm)**
85 l/min (18.7 UK gpm)	**210 l/min (46.2 UK gpm)**
73 l/min (16.1 UK gpm)	**199 l/min (43.8 UK gpm)**
62 l/min (13.6 UK gpm)	**188 l/min (41.4 UK gpm)**
51 l/min (11.2 UK gpm)	**176 l/min (38.7 UK gpm)**
38 l/min (8.4 UK gpm)	**164 l/min (36.1 UK gpm)**
34 l/min (7.5 UK gpm)	**160 l/min (35.2 UK gpm)**

Changing the flow patterns

NOTE: *To prevent failure or damage to the tool, make sure that you select the correct circuit configuration and flow rate for the tool.*

1. Operate the switch **(1)** located on the front right-hand switch panel to display the flow pattern to be changed. Every time the switch **(1)** is pressed, one of the different types of flow patterns recorded for the pump can be selected.

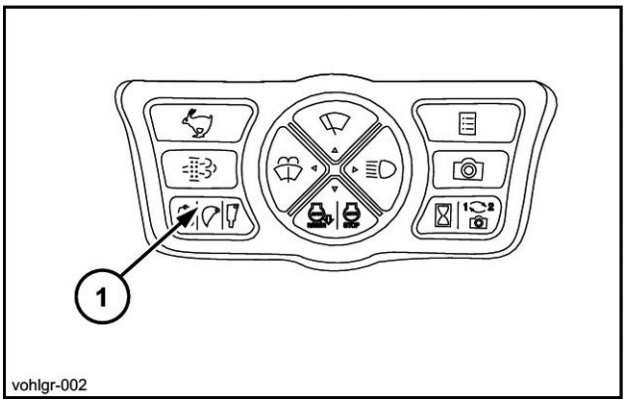

VOHLGR-002 30

2. The recorded value can be identified by the number shown on the screen, e.g.:
   (1) = value 1 in the table.
   (2) = value 2 in the table.
   (3) = value 3 in the table.

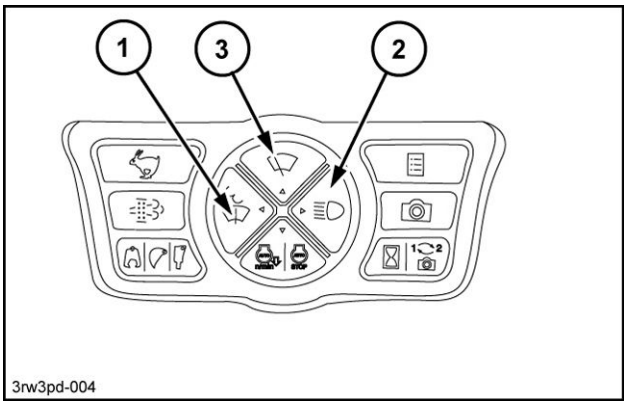

3RW3PD-004Z 31

3. Operate the windshield wiper switch **(1)** to show the previous pattern.
   Operate the auto idling switch **(2)** to show the following pattern.
4. Operate the travel speed switch **(3)** to record.

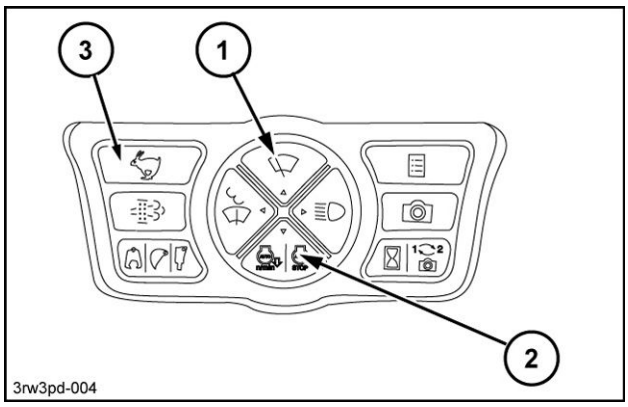

3RW3PD-004C 32

Optional hand control levers configuration

The switches can be wired by your CASE CONSTRUCTION Dealer to control either single function or dual function hydraulic configurations.

The machine can have two types of auxiliary hydraulic circuits. One circuit can be used for single flow equipment, such as hydraulic breakers. The second type of circuit is intended for use with single flow or double flow (with continuous flow) for use with demolition concrete crushers, etc.

The optional control buttons can be used to activate and control the system for multipurpose tools such as a crusher, nibbler, etc. Additionally they can be configured to regulate the preset hydraulic oil flow for the specific tool when pressed.

See your CASE CONSTRUCTION Dealer for specific options and controls for hydraulic hammers, breakers, nibblers, or other special attachments.

Left-hand control lever

The left hand control lever can control four machine operations for the operator's convenience.
The radio mute switch is located on the underneath side of the left hand control lever, while button **(3)** enables the horn.
Two additional function switches **(1)** and **(2)** are available for optional use.

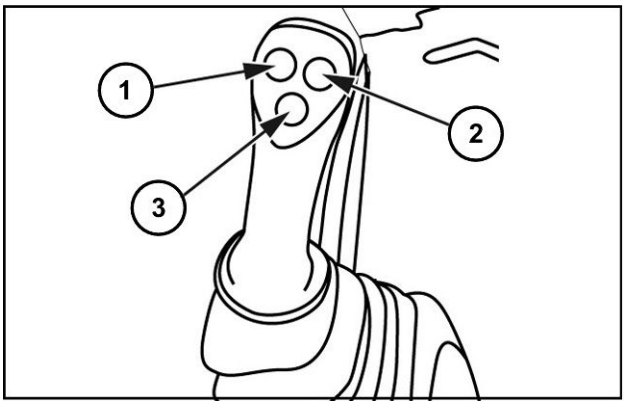

NZIMV6-002B 1

Right-hand control lever

The right hand control lever controls the engine idle speed selector **(6)**. This button enables automatic engine idle without operating the throttle button.
To select idle speed, press and release the control for the engine automatically to go into idle speed.
The message "Engine idling" will appear on the display panel.
When the control is pressed and released once more the engine will revert to its original speed and the message on the display panel will disappear.
The two additional buttons **(4)** and **(5)** on the right hand control lever are for optional tools such as a hydraulic hammer, breakers, or other special attachments.

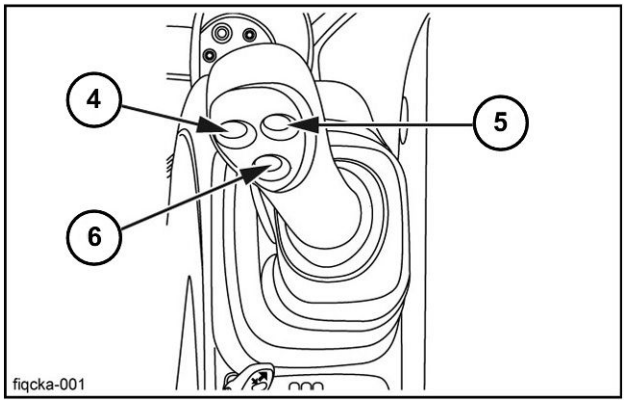

FIQCKA-001C 2

PARKING THE UNIT

Parking the machine

1. Position the machine on flat, level ground, away from soft ground, excavations or poorly shored cavities.
2. Place the upperstructure frame in line with the under-carriage, retract the attachment, dig the bucket into the ground and lower the dozer blade (if equipped).
3. Turn the engine throttle button to low idle position and let the engine run for approximately five minutes.
4. If necessary, activate the anti-theft protection. (Refer to page **4-4**).

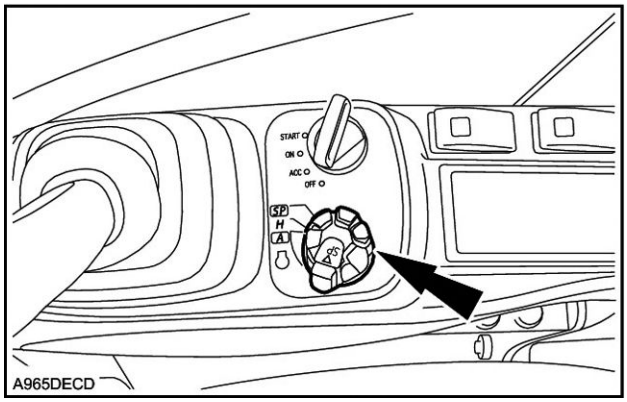

A965DECD 1

5. Stop the engine, remove the ignition key.

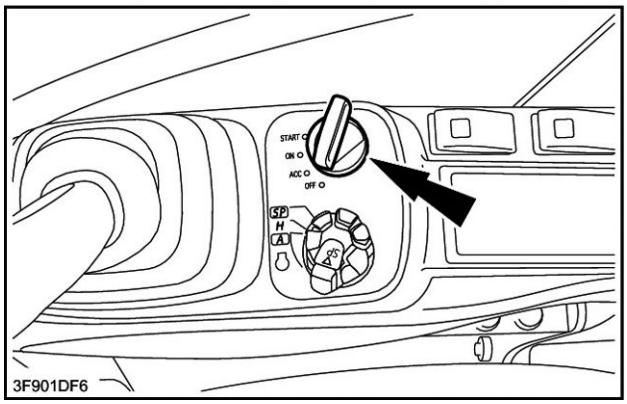

3F901DF6 2

6. Raise the function cancellation lever.

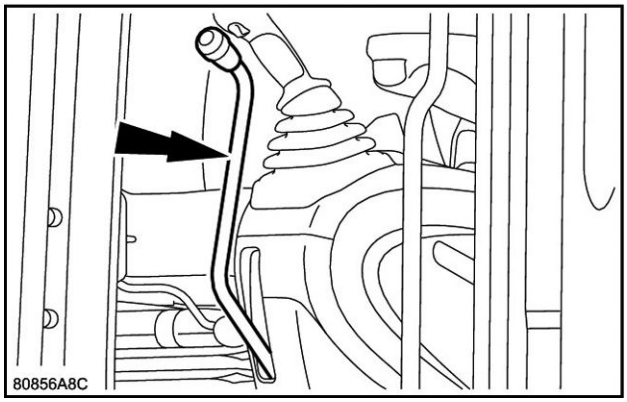

80856A8C 3

7. Lock the operator's compartment door and make sure that the hoods, lower panels and side doors are properly fastened.

ATTENTION: *Check that the no part of the machine is encroaching on the highway. If this cannot be avoided, set up approved traffic signs.*

⚠ WARNING

Fall hazard!
Jumping on or off the machine could cause an injury. Always face the machine, use the handrails and steps, and get on or off slowly. Maintain a three-point contact to avoid falling: both hands on the handrails and one foot on the step, or one hand on the handrail and both feet on the steps.
Failure to comply could result in death or serious injury.

W0141A

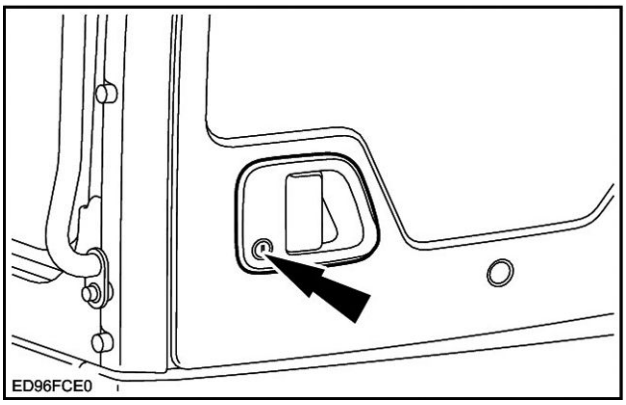

ED96FCE0 4

5 - TRANSPORT OPERATIONS

SHIPPING TRANSPORT

Transporting the machine

ATTENTION: *For transporting the machine without attachment, the counterweight must be removed, consult your CASE CONSTRUCTION Dealer.*

Removing the attachment from the machine

⚠ WARNING

Improper operation or service of this machine can result in an accident.
Assign a supervisor to direct worksite operations. Agree on all safety measures, procedures, and suitable hand signals.
Failure to comply could result in death or serious injury.

W0287A

⚠ WARNING

Crushing hazard!
The lifting systems must be operated by qualified personnel who are aware of the correct procedures to follow. Make sure all lifting equipment is in good condition, and all hooks are equipped with safety latches.
Failure to comply could result in death or serious injury.

W0256A

⚠ WARNING

Crushing hazard!
This operation may be dangerous. You are advised to wear suitable clothing and respect all relevant safety messages.
Failure to comply could result in death or serious injury.

W0283A

⚠ WARNING

Pressurized system!
Before removing the attachment from the machine, make sure the air pressure and hydraulic oil pressure are at zero.
Failure to comply could result in death or serious injury.

W0284A

The use of lifting systems is necessary for removal and installation of the machine attachment and counterweight. Refer to the Service Manual or consult your CASE CONSTRUCTION Dealer.

NOTICE: *Prevent dust and contamination entering open circuits. Any contamination of circuits can cause malfunction of the machine.*

By rail

Since transport by rail is subject to special regulations, consult an approved organization.

On a trailer

⚠ WARNING

Transport hazard!
The machine can slip or fall from a ramp or trailer. Make sure the ramp and trailer are not slippery. Remove all oil, grease, ice, etc. Move the machine on or off the trailer with machine centered on the trailer or ramp.
Failure to comply could result in death or serious injury.

W0152A

⚠ WARNING

Tip-over hazard!
The counterweight MUST be removed before transporting the machine without an attachment. Consult you dealer.
Failure to comply could result in death or serious injury.

W0260A

ATTENTION: *Make sure you know the safety rules and regulations before transporting the machine. Make sure both trailer and machine are fitted with the right safety equipment.*

Loading

1. Place a block behind the trailer wheels. Install the trailer side extensions (if equipped).

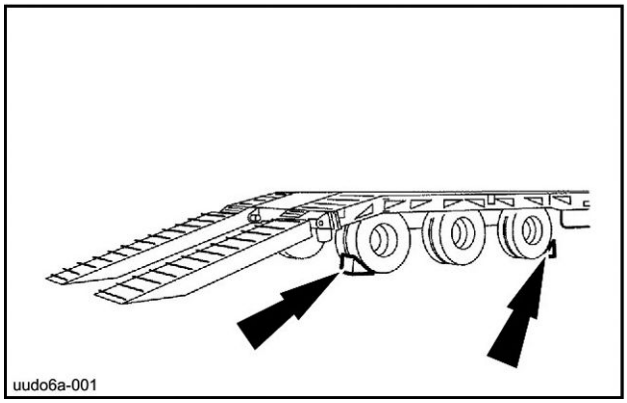

UUDO6A-001 1

2. Select the automatic engine idle function **(1)**. The idling display on the monitor goes off.

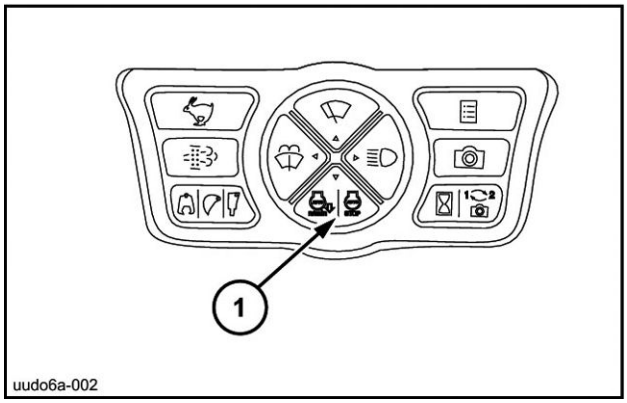

UUDO6A-002 2

3. Select low travel speed, indicator lamp off. A "turtle" is displayed on the monitor.
4. Raise the dozer blade (if equipped).

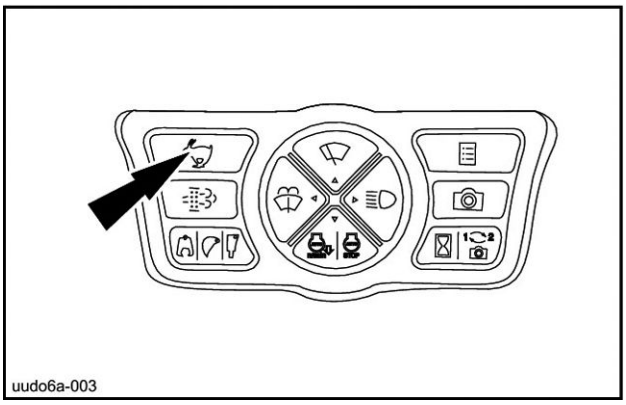

UUDO6A-003 3

5. (Machine with attachment)
   Place the machine in line with the trailer, with the travel reduction gears towards the access ramps. Raise the attachment and bring it to about twenty centimetres above the bed of the trailer.

ATTENTION: *In this position, the travel and steering controls are reversed.*

NOTE: *If the machine is equipped with a dozer blade, it is preferable to load the machine with the dozer blade facing the trailer to prevent interference with the attachment.*

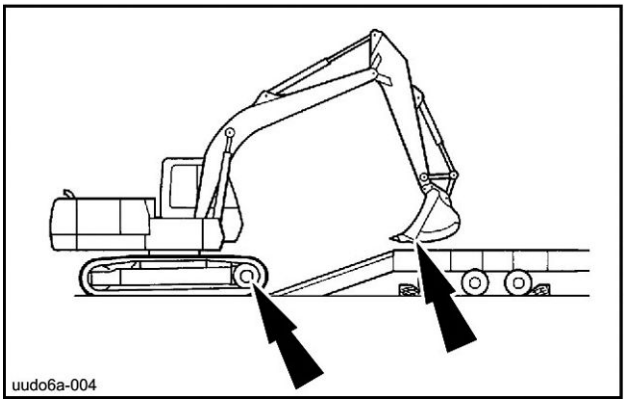

UUDO6A-004 4

5. (Machine without attachment)
   Place the machine in line with the trailer, with the travel reduction gears towards the access ramps.

ATTENTION: *In this position, the travel and steering controls are reversed.*

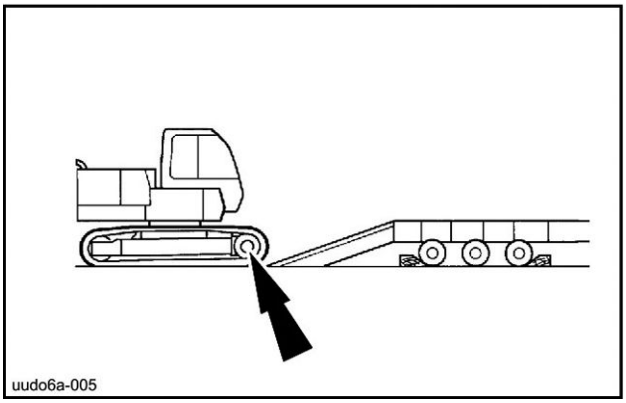

UUDO6A-005 5

6. (Machine with attachment)
   When the machine is completely on the trailer, swing the upperstructure to bring the attachment round to the ramp end.

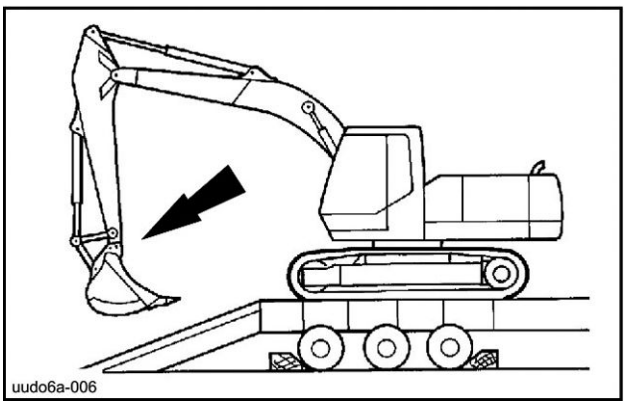

UUDO6A-006 6

7. (Machine with attachment)
   Place the machine completely in front of the trailer so that the attachment and the dozer blade (if equipped) rest on the floor of the trailer.

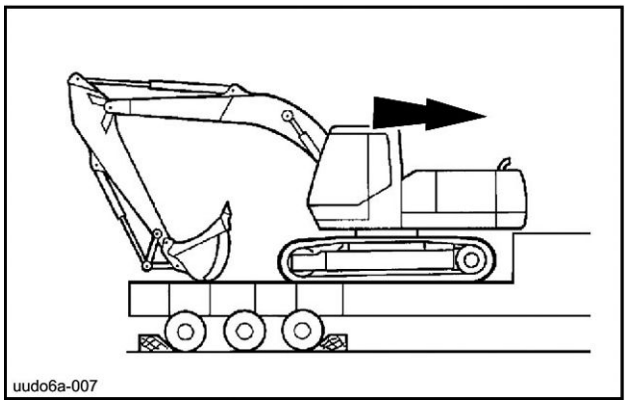

UUDO6A-007 7

7. (Machine without attachment)
   Place the machine completely in front of the trailer, rotate the upperstructure then place the dozer blade (if equipped) on the floor of the trailer.
8. Stop the engine, remove the ignition key and raise the function cancellation lever.
9. Make sure that all doors, hoods and access panels are correctly locked.
10. Fold the rear view mirrors inwards.

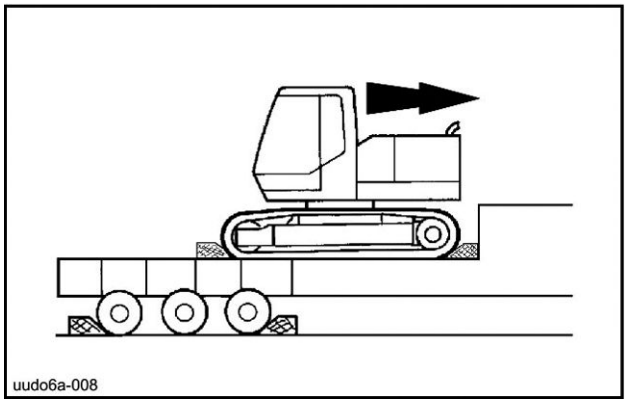

UUDO6A-008 8

11. Use blocks and chains to fasten the machine and the attachment (if equipped) to the trailer. See Tie downs for shipment - Procedure on page **5-6**.

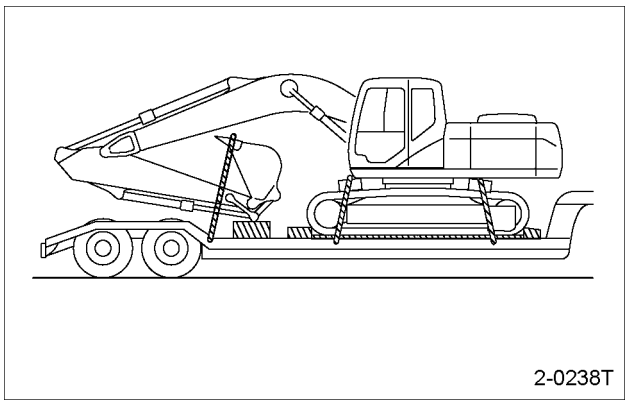

2-0238T 9

12. Measure the distance between the ground and the highest point of the machine. You must know the overall height.

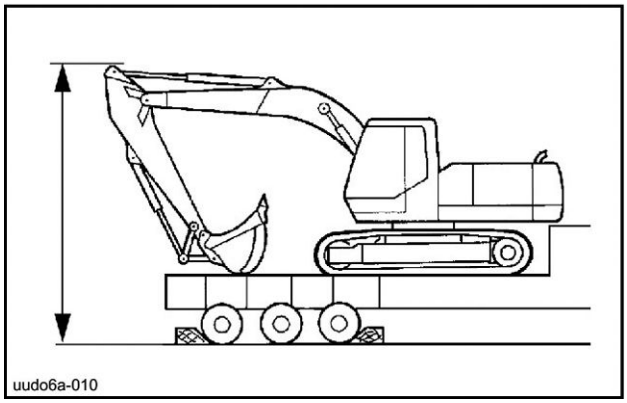

UUDO6A-010 10

Unloading

1. Remove the blocks and fastening chains.
2. Start the engine.
3. Lower the function cancellation lever and raise the dozer blade (if equipped).
4. (Machine with attachment)
   Raise the attachment to bring it a few centimetres above the trailer bed.
5. Select low travel speed.
6. Move the machine forward slowly, raising the attachment (if equipped) so as to keep it a few centimetres off the ground.
7. Turn the rear view mirrors back to their correct position.
8. (Machine without attachment)
   Install the attachment and the counterweight.

ATTENTION: *When the attachment has been installed, all air must be removed from the hydraulic circuit and the machine must be tested for correct operation. Do not forget to check the oil level.*

Tie downs for shipping — Procedure

Example 1

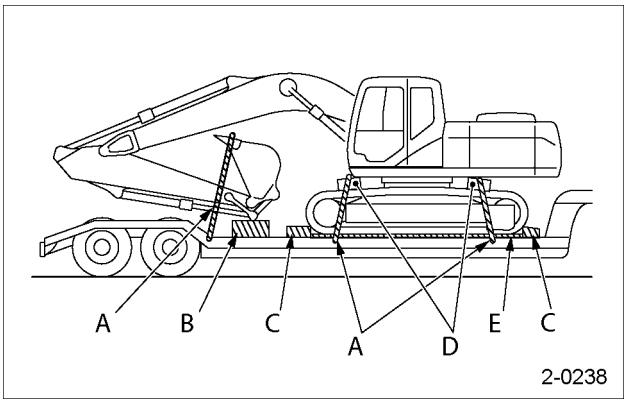

2_0238 1

A. Wire rope
B. Block
C. Stop block
D. Padding
E. Rubber mat

1. Check that the machine is properly loaded in position and that the trailer is level.
2. Fold the bucket and then fold the arm. Place wooden blocks on the platform of the trailer. Lower the boom slowly and adjust the wooden blocks so that the bucket and arm rest upon them.
3. Stop the engine.

- Make sure that the radio antenna is lowered.
- Adjust the mirror so that it will not hit against an object around the machine during transportation.

4. Lock the doors (the operator's cab on both sides).
5. After verifying that there are no problems with the machine, block the tracks and tie down the machine with chains, wire ropes, etc. so that it does not move during transportation.
6. Verify that everything is blocked and tied down before transporting the machine.

NOTICE: *Movement of the machine during transportation is dangerous. Secure the machine firmly with wire rope or the like so that it won't move from vibration.*

Example 2

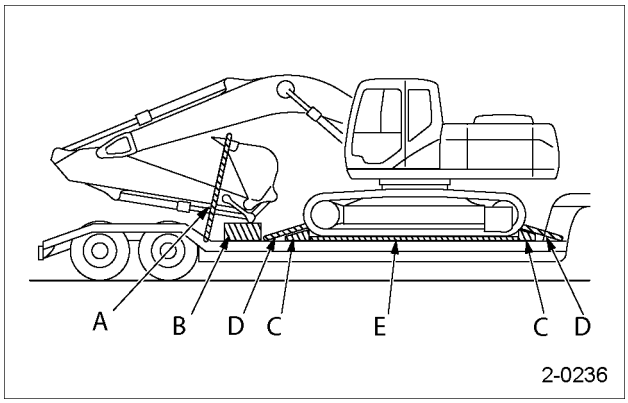

2_0236 2

A. Wire rope
B. Block
C. Stop block
D. Chain
E. Rubber mat

1. Check that the machine is properly loaded in position and that the trailer is level.
2. Fold the bucket and then fold the arm. Place wooden blocks on the platform of the trailer. Lower the boom slowly and adjust the wooden blocks so that the bucket and arm rest upon them.
3. Stop the engine.

- Make sure that the radio antenna is lowered.
- Adjust the mirror so that it will not hit against an object around the machine during transportation.

4. Lock the doors (the operator's cab on both sides).
5. After verifying that there are no problems with the machine, block the tracks and tie down the machine with chains, wire ropes, etc. so that it does not move during transportation.

6. To secure the lower frame, install chains to the installation holes for transporting the lower. Cross and tightly pull the chains to attach the other ends of chains to the trailer. Also, secure the front and rear of lower with chains.

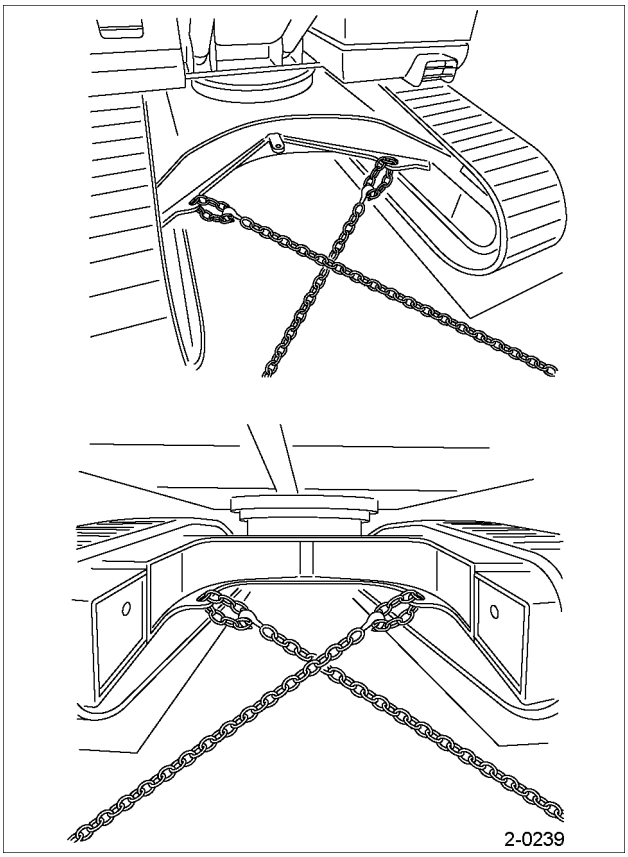

2_0239 3

7. For machines with blade, install chains to the installation holes at the top ends of blade, cross and tightly pill the chains to attach the other ends of chains to the trailer.

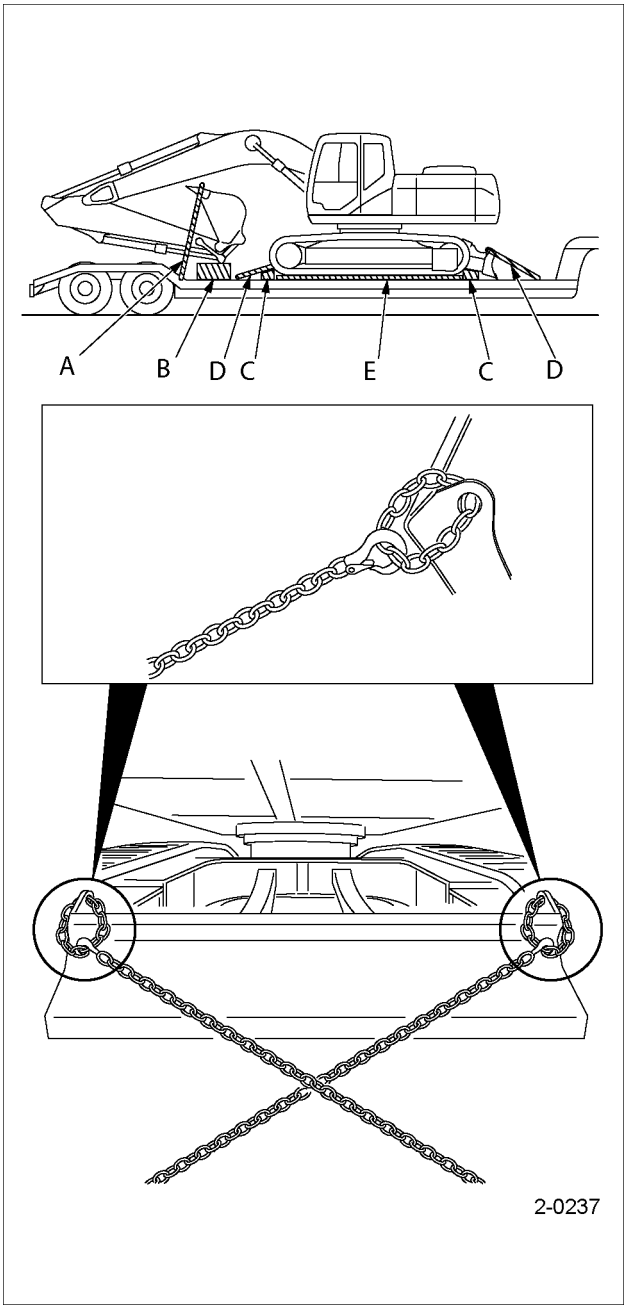

2_0237 4

A. Wire rope
B. Block
C. Stop block
D. Chain
E. Rubber mat

8. Verify that everything is blocked and tied down before transporting the machine.

NOTICE: *Movement of the machine during transportation is dangerous. Secure the machine firmly with wire rope or the like so that it won't move from vibration.*

Transport setting for long arm machine

With long arm (optional), there are **2** pin locations; transport position **(B)** and working position **(A)** .

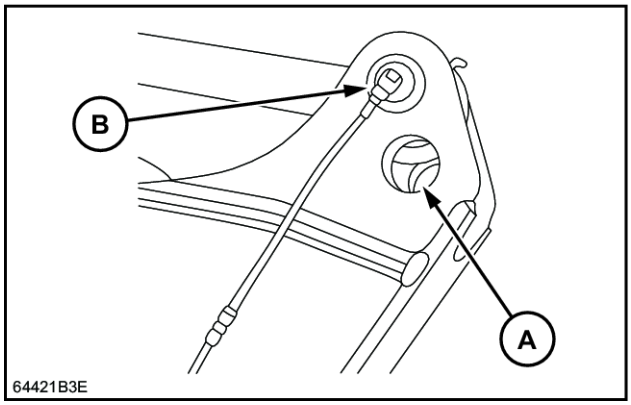

64421B3E 1

NOTICE: *When transporting the machine, ensure that the arm cylinder pin is in the transport location* ***(B)****. Otherwise, the boom top will be higher than the operator's cabin and can cause interference with objects above the cabin.*

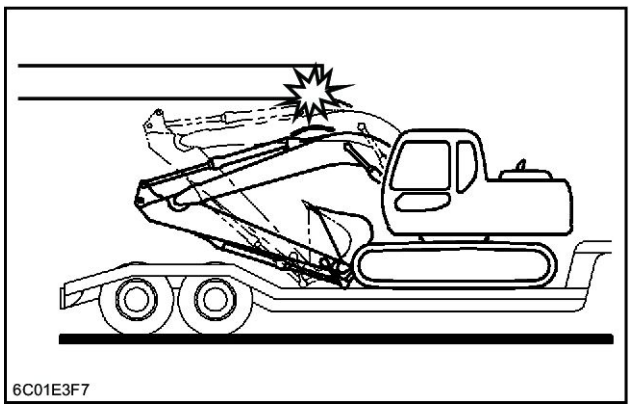

6C01E3F7 2

NOTICE: *Before setting the machine in transportation position, be sure to fold the bucket.*
Otherwise, the bucket may hit the operator's cabin.
Do not dig with arm cylinder pin in the transporting location. Otherwise, the machine will be damaged.

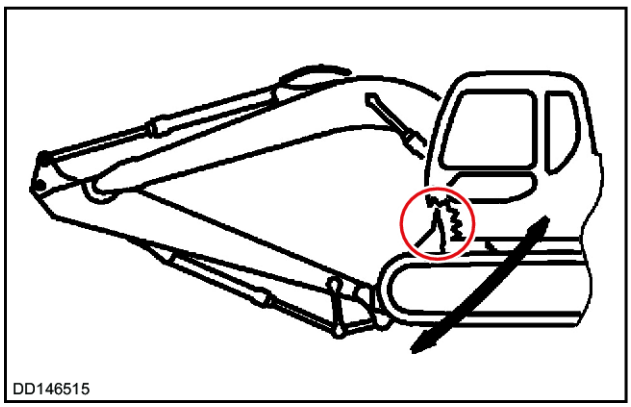

DD146515 3

Label located in the cab.

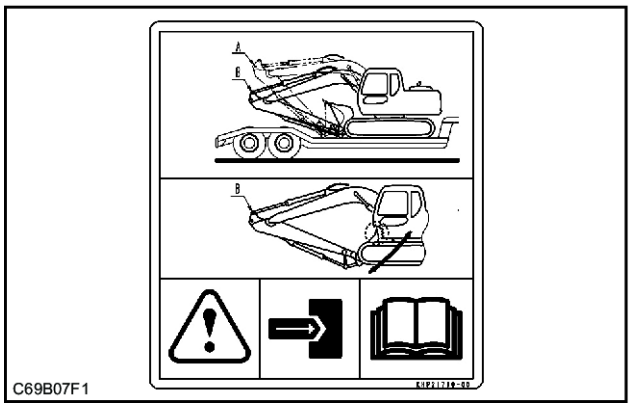

C69B07F1 4

Towing

⚠ WARNING

Misuse hazard!
Towing is a delicate maneuver that is always carried out at the risk of the user. The manufacturer's warranty does not apply to incidents or accidents that occur during towing. Where possible, carry out the repairs at the site.
Failure to comply could result in death or serious injury.

W0286A

⚠ WARNING

Hazard to bystanders!
The operator must be the only person on the machine when towing. Make sure that nobody else is on the machine or within its working range.
Failure to comply could result in death or serious injury.

W0259A

ATTENTION: *Towing must always be done in alignment with the undercarriage.*

NOTICE: *The machine must be towed very slowly, over a short distance and only if it is really unavoidable.*

Towing the machine

First, make sure that it can be towed without risk of further damage.

As far as possible try to carry out repairs on spot or consult your CASE CONSTRUCTION Dealer.

If the machine is bogged down for example, it must be towed as follows:

1. Make sure that the shackles, chains and tackle are in perfect condition and strong enough to move the load.
2. Attach the shackles, chains and tackle to the undercarriage taking care to protect any salient angles.
3. Pull the machine without jerking, very slowly and in alignment with the undercarriage.

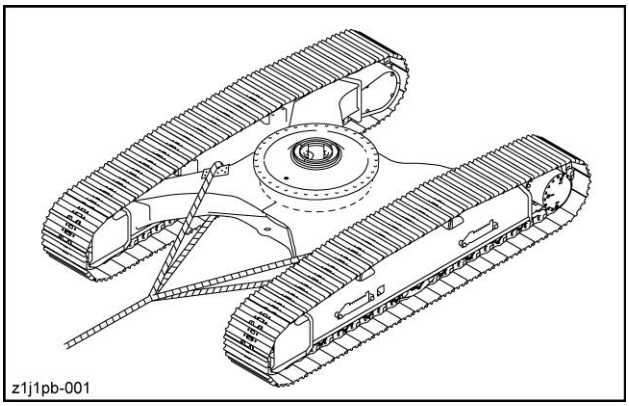

Z1J1PB-001 1

Towing a load

To tow a load of up to 10 tons, use one of the towing holes provided for this purpose. (Refer to page **3-77**).

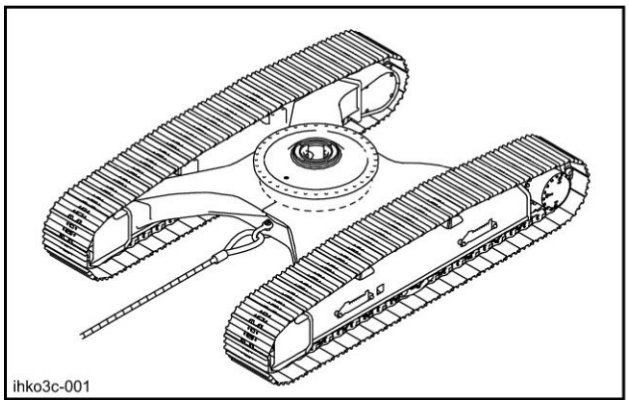

IHKO3C-001 2

6 - MAINTENANCE

GENERAL INFORMATION

Basic instructions

Servicing instructions

⚠ WARNING

Improper operation or service of this machine can result in an accident.
If you do not understand a maintenance procedure, or doubt your ability to perform a maintenance procedure correctly, see your authorized dealer.
Failure to comply could result in death or serious injury.

W0157A

⚠ WARNING

Improper operation or service of this machine can result in an accident.
Raised equipment or machine movement without an operator can cause serious injury. Always do the following before performing any maintenance:
Park the machine on flat, level ground.
Lower the attachment to the ground.
Shut down the engine and remove the ignition key.
Lock the tracks.
Failure to comply could result in death or serious injury.

W0944D

NOTICE: *Be sure all the service operations in this section are carried out punctually at the intervals given, in order to ensure optimum performance levels and maximum safety when using the machine.*

- Respect the maintenance intervals by checking the hourmeter every day. Before starting maintenance, park the machine on flat, firm ground, away from any obstacles, with the arm retracted and the bucket on the ground. Lower the dozer blade (if equipped) until it rests on the ground. Unless otherwise specified, all maintenance operations must be carried out with the engine stopped, and the key removed from the ignition key. It is preferable to wait for all circuits to cool down before starting work.
- Clean the grease fittings before lubrication. Clean around plugs and filler holes before adding fluid. No dust or dirt must enter the components or the circuits. Wear suitable clothing and remember to use the necessary safety equipment.
- When carrying out service work on the machine, place a "Do not operate" tag on the instrument panel. Never climb down from the operator's compartment leaving the engine running.
- Remove the necessary lower panels during maintenance of certain machine components.

⚠ WARNING

Moving parts!
Make sure the lower panels are properly closed before driving the machine.
Failure to comply could result in death or serious injury.

W0910A

Any modification to this machine without prior authorization could cause serious injury. Do not make any modifications without authorization. Consult your CASE CONSTRUCTION Dealer.

NOTICE: *If you use your machine in particularly harsh conditions (dusty or corrosive atmosphere, etc.), the servicing intervals should be reduced accordingly.*

NOTICE: *Take particular care to replace all filters regularly. Clean filters mean longer engine running life.*

ATTENTION: *Oil and fluid should not be thrown on the ground. They must be stored and removed by a company which is responsible for their recycling or their disposal.*

Systemgard lubrication analysis program

Ask your CASE CONSTRUCTION dealer about our lubricant analysis program, Systemgard. Through this service, your lubricants are tested in an independent laboratory. You simply remove a sample of lubricant from your machine and send the sample to the independent Systemgard laboratory. After the sample is processed, the laboratory will report back to you and guide you with maintenance requirements. Systemgard can help support your equipment up time and provide you with a service that can pay back dividends when you trade for another piece of equipment.

The normal engine oil change interval is every 500 hours of operation. Operating conditions, quality of the engine oil and sulphur content of the fuel can change this interval. It is recommended that you use the Systemgard Lubricant Analysis program. Consult your CASE CONSTRUCTION Dealer.

Hourmeter

The hourmeter enables service operations to be scheduled. Its hourly indications are the same as those of a clock when the engine is running.
Servicing intervals are carefully calculated to guarantee safe and efficient machine operation.
Be sure to carry out all the servicing operations properly as defined in this manual.

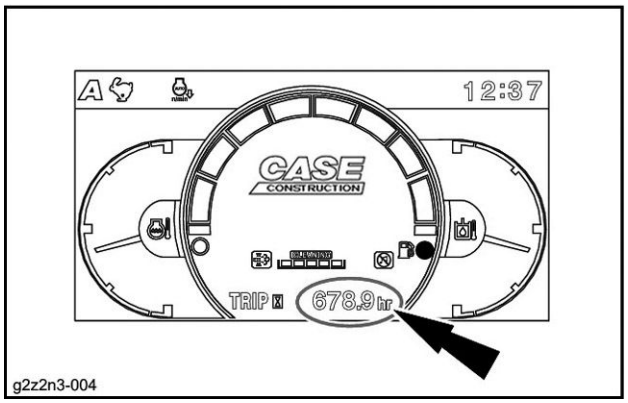

G2Z2N3-004Z 1

Daily inspections

Every day, before starting work, it is necessary to inspect the machine and service certain of its components.

General remarks

- Check signs of leaking oil or water.
- Check that all screws and nuts are correctly tightened.
- Wipe off any dust (engine, operator's compartment etc.).
- Check for any signs of damage.

Engine

- Check the oil level and change the oil if necessary.
- Check the coolant level.
- Check the radiator for signs of clogging or deterioration.
- Check the radiator fan belt tension.
- Check the air filter is clean and not restricted.
- Check the components for signs of leaking oil or water.
- Check the condition of all lines.

Upperstructure

- Check the fuel tank level.
- Check the hydraulic reservoir level.
- Check that the hydraulic oil is clean.
- Check the components for signs of leaking oil or water.
- Check the condition of all lines.
- Make sure there are no electrical short circuits.
- Check the battery connections are properly tightened.
- Adjust the rear view mirrors.
- Check the cameras.

Undercarriage

- Check the pad hardware.
- Check the condition of the tracks.
- Check that the upper and lower track rollers and the idler wheels are not leaking oil.

Attachment

- Check the cylinders are not leaking oil.
- Check the condition of all lines.
- Check the condition of the bucket teeth.

After starting the engine

- Did the engine start correctly? Are the exhaust fumes normal? Any strange noises?
- Check for abnormal noise on the hydraulic components.
- Check the components for signs of leaking oil or water.
- Check the audible alarm devices, working lights and windshield wipers.
- Check that all circuits (travel, swing and tool) are functioning correctly.

ATTENTION: *If the slightest defect is found, repair it immediately before using the machine or consult your CASE CONSTRUCTION Dealer.*

Quick coupler (optional)

⚠ WARNING

Improper operation or service of this machine can result in an accident.
If you do not understand a maintenance procedure, or doubt your ability to perform a maintenance procedure correctly, see your authorized dealer.
Failure to comply could result in death or serious injury.

W0157A

Servicing instructions

Every day and before each installation of the quick coupler:

- Check that the locking bar functions correctly and that it is not fouled by foreign matter.
- Check the quick coupler cylinder hoses for free movement.
- Check the return spring and its mounting hardware.
- Check for any signs of cracks.

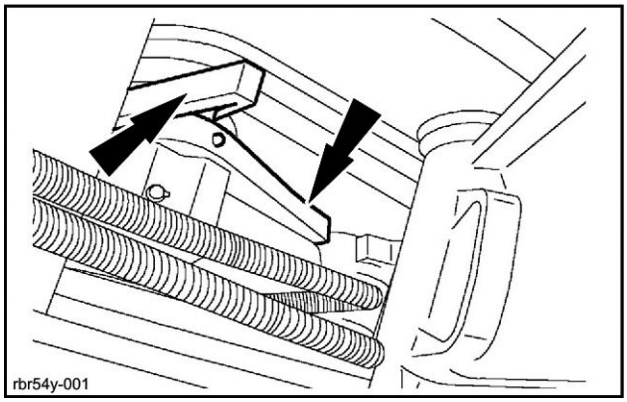

RBR54Y-001 2

Modification of the quick coupler without prior authorization can cause serious injury. Do not carry out any modification without authorization. Consult your CASE CONSTRUCTION Dealer.

NOTICE: *If you use your quick coupler under particularly severe conditions (with a hydraulic breaker or in a corrosive environment, etc.) the servicing and inspection intervals must be reduced.*

Incorrect functioning

ATTENTION: *Make sure that the attachment is in full contact with the ground before carrying out the following checks.*

If the quick coupler does not work correctly, check the following items:

- That no pin is broken, bent or lost.
- That no foreign matter is fouling the safety device.
- The condition of the return spring.
- That the cylinder is not damaged or bent.
- That there are no leaks from hydraulic hoses, etc.

If the problem persists after all these checks, consult your CASE CONSTRUCTION Dealer.

Fluids, fuels and lubricants

Lubricants must have the correct properties for each application.

NOTICE: *The conditions of use for individual fluids and lubricants must be respected.*

ATTENTION: *When using the machine in a hot or cold region, consult your CASE CONSTRUCTION Dealer.*

Hydraulic fluid

CASE AKCELA HYDRAULIC EXCAVATOR FLUID is specially designed for high pressure applications and for the CASE CONSTRUCTION hydraulic system. The type of fluid to be used depends on the ambient temperature.

Temperate climates:

-20 °C (**-4.0 °F**) to **40 °C** (**104.0 °F**).
CASE AKCELA HYDRAULIC EXCAVATOR FLUID
(MS1230. ISO VG 46. DIN 51524 PART 2 HV)

Hot climates:

0 °C (**32.0 °F**) to **50 °C** (**122.0 °F**).
CASE AKCELA HYDRAULIC EXCAVATOR FLUID "HOT CLIMATE"
(MS 1216. ISO VG 68. DIN 51524 PART 3 CATEGORY HVLP)

Cold climates:

-25 °C (**-13.0 °F**) to **20 °C** (**68.0 °F**).
CASE AKCELA HYDRAULIC EXCAVATOR FLUID "COLD CLIMATE"
(MS 1216. ISO VG 32. DIN 51524 PART 2)

Biodegradable fluid:

-30 °C (**-22.0 °F**) to **40 °C** (**104.0 °F**).
This yellow-coloured fluid is miscible with standard fluid. If used to change standard fluid, it is advisable to drain the circuit completely before refilling with this fluid.
CASE AKCELA HYDRAULIC EXCAVATOR FLUID BIO
(MS 1230. ISO VG 46. DIN 51524 PART 2 HV)

Transmission component oil

Extreme pressure oil used for enclosed transmission components.
CASE AKCELA GEAR 135 H EP 80W-90
(SAE 80W-90. API GL 5. MIL-L-2105 D. MS 1316. ZF TE-ML 05A)

Grease

CASE AKCELA 251H EP MULTI-PURPOSE GREASE (NLGI 2)
"Extreme Pressure" multipurpose grease with lithium soap and calcium.

Engine oil

The **CASE TUTELA LE ENGINE OIL** is recommended for your engine. This oil ensures correct lubrication of your engine in all working conditions.

If the **CASE TUTELA LE ENGINE OIL** cannot be obtained, use the oil corresponding to one of the following categories: **ACEA E6. API CJ-4.**

Fuel

The fuel must conform to Interim Tier 4/Stage 3B. Exhaust Gas Control Regulations.

Use grade number **2-D (S15) fuel**.

Using other types of fuel may lead to stalled engine output or deterioration in fuel economy.

During cold weather, lower than **-7 °C** (**19.4 °F**), it is temporarily acceptable to use a mixture of **No. 1-D (S15)** and **No. 2- D (S15)**.

Consult the fuel supplier or the CASE CONSTRUCTION Dealer.

If the temperature drops below the fuel cloud point, output deficiency or engine start problems may occur due to wax crystals.

Conditions applicable to diesel fuel. The diesel fuel used must:

- be free from dust particles, even minute ones,
- have the proper viscosity,
- have a high cetane number,
- present great fluidity at low temperatures,
- have low sulphur content,
- have very little residual carbon.

Recommended conditions that can be applied to diesel fuel:

- **JIS (Japanese Industrial Standard): No. 2**
- **DIN (Deutsche Industrie Normen): DIN 51601**
- **SAE (Society of Automotive Enginneers)** based on **SAE-J-313C : No. 2-D (S15)**
- **BS (British Standard)** based on **B-1S/2869-1970: Class A**
- **EN 590** (less than 10 ppm sulfur)
- Or fuel specified by the country using these standards and this machine.

ATTENTION: EPA *(Environmental Protection Agency), regulation requires ultra low sulfur fuel only.*

ATTENTION: *If a serious problem occurs when other fuels are used, the warranty is invalidated.*
Using a non-recommended fuel may lead to damage of the fuel injection pump, injector, ***DPD*** *(Diesel Particulate Diffuser), and other fuel supply systems or to the engine.*

ATTENTION: *The CASE CONSTRUCTION company assumes no responsability for these damages.*

Note that the warranty will not be applied for these damages.

It is recommended that the following safety information be considered in order to prevent damage to the engine fuel supply system.

- Some fuel suppliers mix old engine oil and diesel fuel.
- Makers of larger engine permit the use of this kind of fuel.
- However, do not use diesel fuel contaminated with engine oil in customer's engines.
- Not only will this fuel damage the engine, it may also have a negative impact on the exhaust gas purification function.
- Before using diesel fuel, confirm with the supplier whether the fuel complies with the above specifications.

NOTICE: *Consult the supplier or the CASE CONSTRUCTION Dealer regarding appropriate use of fuel additives.*

ATTENTION: *In order to prevent condensation during cold weather, fill the fuel tank to full after the completing the day's work.*

Fuel storage:

Long storage can lead to the accumulation of impurities and condensation in the fuel. Engine trouble can often be traced to the presence of water in the fuel.

The storage tank must be placed outside and the temperature of the fuel should be kept as low as possible. Drain off water and impurities regularly.

Biodiesel fuel

Fatty Acid Methyl Ester Biodiesel (Biodiesel Fuel) consists of a family of fuels derived from vegetable oils treated with methyl esters.

ATTENTION: *Biodiesel Fuel blends are approved for your engine only if they comply with* ***EN14214*** *Specification Standards or* ***ASTM D6751****.*

ATTENTION: *It is imperative that you check which blend is approved for your engine with your CASE CONSTRUCTION Dealer. Be aware that the use of Biodiesel Fuel that does not comply with the Standards mentioned above could lead to severe damage to the engine and fuel system of your machine. The use of fuels that are not approved may void CASE CONSTRUCTION Warranty coverage.*

Biodiesel Fuel Usage Conditions:

ATTENTION: *The Biodiesel Fuel must meet the fuel Specification mentioned above.*

Biodiesel Fuel must be purchased from a trusted supplier that understands the product and maintains good fuel quality. Biodiesel Fuel must be pre-blended by the supplier. Mixing Biodiesel Fuels on-site can result incorrect mixture that can lead to problems with both engine and fuel system.

Engine performance is affected by the use of Biodiesel Fuel. There may be up to **12 %** reduction in power or torque depending on the blend used.

ATTENTION: *DO NOT modify the engine and/or injection pump settings to recover the reduced performance.*

The reduced power must be accepted if using any Biodiesel Fuel blend.

Some modification may be required to allow your engine to run Biodiesel Fuel. Consult your CASE CONSTRUCTION Dealer for complete information on these modifications.

Biodiesel Fuel has a higher cloud point than Diesel Fuel.

ATTENTION: *The use of high Biodiesel Fuel blends are not recommended in cold weather conditions.*

With Biodiesel Fuels, it may be necessary to change the engine oil, engine oil filter and fuel filter elements more frequently than with Diesel Fuels. Biodiesel Fuel can remove rust and particles from the inside of on-site fuel storage tanks that would normally adhere to the sides of the tank. Like particle deposits that commonly occur with Diesel Fuel, these particles can become trapped by the machine fuel filters, causing blockage and shortening filter life. In cold weather, this is more likely to happen. Consult your CASE CONSTRUCTION Dealer for information on cold weather operation and proper maintenance intervals when using any Biodiesel Fuel blend.

When handling Biodiesel Fuel, care must be taken not to allow water into the fuel supply. Biodiesel Fuel will actually attract moisture from the atmosphere.

Fuel tanks must be kept as full as possible to limit the amount of air and water vapors in them. It may be necessary to drain the fuel filter water tap more frequently.

Potential oxidation and stability could be a problem with the fuel stored in the machine.

ATTENTION: *Machines must not be stored for more than three months with Biodiesel Fuel blends in the fuel system.*

If long storage periods are necessary, the engine must run on Diesel Fuel for 20 hours to flush the Biodiesel Fuel out of the engine fuel system prior to storage.

ATTENTION: *Biodiesel Fuel must not be stored in on-site storage tanks for more than three months.*

Any spillage of Biodiesel Fuel must be cleaned up immediately before it can cause damage to the environment and the paint finish of the machine.

Before using Biodiesel Fuel blends you should consult with your CASE CONSTRUCTION Dealer to receive full information about the approved blend for your machine and any detailed conditions of its usage.

ATTENTION: *Be aware that not fulfilling the requirements and conditions of Biodiesel Fuel usage will void your machine's CASE CONSTRUCTION Warranty coverage.*

Anti-freeze/anti-corrosion

Use anti-freeze in all seasons to protect the cooling system from corrosion and all risk of freezing with a temperature until **-10 °C** (**14.0 °F**).

CASE AKCELA PREMIUM ANTI-FREEZE

When the temperature is below **-10 °C** (**14.0 °F**) refer to the following anti-freese mixture percentage chart and adjust the concentration. It is recommended that the mixture ratio be controlled by coolant concentration gauge.

Temperature	**-12 °C**	**-16 °C**	**-20 °C**	**-25 °C**	**-30 °C**	**-36 °C**	**-43 °C**
	10.4 °F	**3.2 °F**	**-4.0 °F**	**-13.0 °F**	**-22.0 °F**	**-32.8 °F**	**-45.4 °F**
Anti-freeze	**30 %**	**35 %**	**40 %**	**45 %**	**50 %**	**55 %**	**60 %**
Water	**70 %**	**65 %**	**60 %**	**55 %**	**50 %**	**45 %**	**40 %**

ATTENTION: *Do not mix products of a different origin or brand. The same product must be used when topping up the system.*

Environment and ecology

Before carrying out any maintenance operation on this machine and before disposing of used fluids or lubricants, always think of the environment. Never throw oil or fluid on the ground and never place it in leaking receptacles.

Consult your local ecological recycling center or your CASE CONSTRUCTION Dealer to obtain information on the correct method of disposing of these lubricants.

Soil, air and water are vital factors of life in general. When legislation does not yet rule the treatment of some of the substances which are required by advanced technology, sound judgement should govern the use and disposal of products of a chemical and petrochemical nature.

The following are recommendations which may be of assistance:

- Become acquainted with and ensure that you understand the relative legislation applicable to your country.
- Where no legislation exists, obtain information from suppliers of oils, filters, batteries, fuels, antifreeze, cleaning agents, etc., with regard to their effect on man and nature and how to safely store, use and dispose of these substances.
- Local Environmental Agency will, in many cases, be able to help you as well.

Fluid capacities and lubricant specifications

Component	Fluid/Lubricant type	Capacity
Engine	**CASE TUTELA LE ENGINE OIL**	**17 l** (**4.5 US gal**)
Cooling system	**CASE AKCELA PREMIUM ANTI-FREEZE**	**15.3 l** (**4.0 US gal**)
Fuel system	Refer to page **6-5**	Reservoir **200 l** (**52.8 US gal**)
Hydraulic system	**CASE AKCELA HYDRAULIC EXCAVATOR FLUID**	Total system **158 l** (**41.7 US gal**)
		Reservoir **75 l** (**19.8 US gal**)
Travel reduction gear	**CASE AKCELA GEAR 135 EP**	Per reduction gear **2.1 l** (**0.6 US gal**)
Swing reduction gear	**CASE AKCELA GEAR 135 EP**	**3 l** (**0.8 US gal**)
	CASE AKCELA 251H EP MULTI-PURPOSE GREASE	**0.5 kg** (**1.1 lb**)
Turntable teeth	**CASE AKCELA 251H EP MULTI-PURPOSE GREASE**	**9.9 kg** (**21.8 lb**)

Grease points

Type of grease: (refer to page **6-5**)

NOTE: *The numbers within brackets mentioned on the right of the description indicate the number of lubrication points.*

NOTE: *After lubrication, refit the protective and indicating plastic caps to the grease fittings.*

Machine

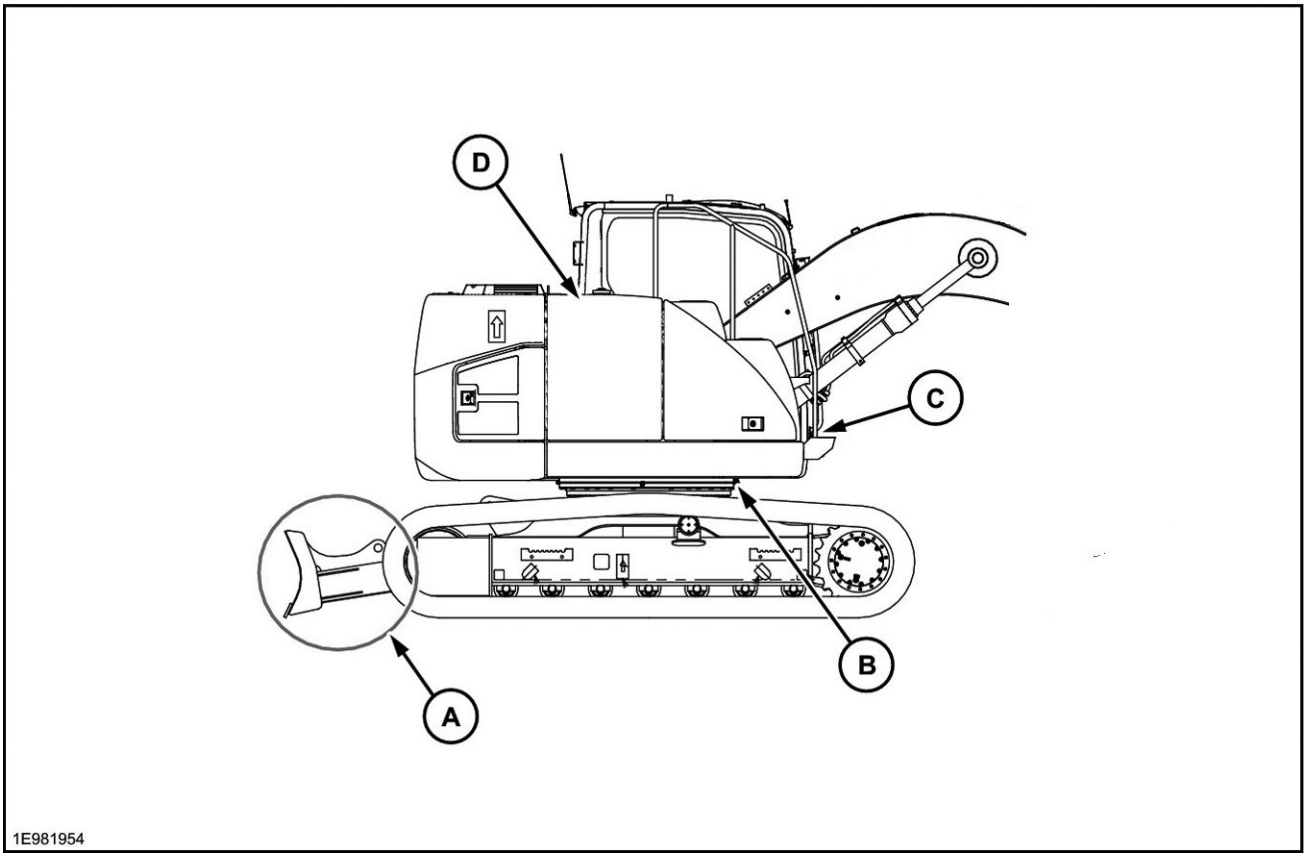

1E981954A 1

Every 50 hours (standard machine only)

Dozer blade: **(8)**
Dozer blade cylinders: **(4)**

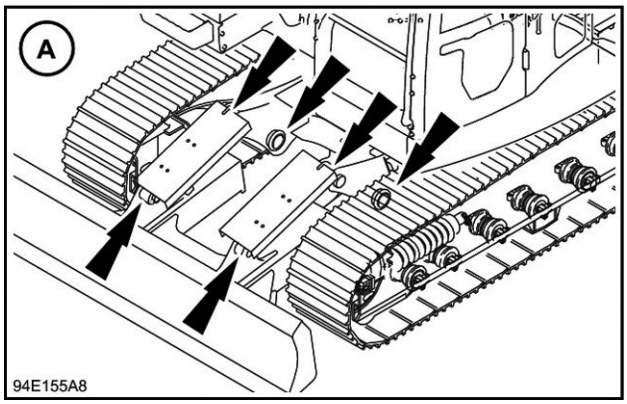

94E155A8 2

Every 500 hours

Turntable: **(2)**

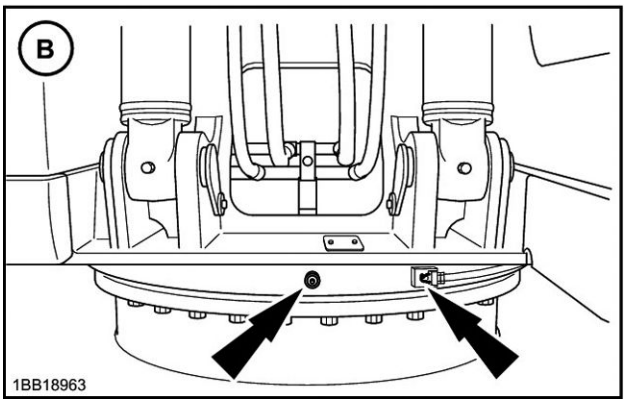

1BB18963 3

Turntable teeth: **(1)**

See "Greasing the turntable teeth".

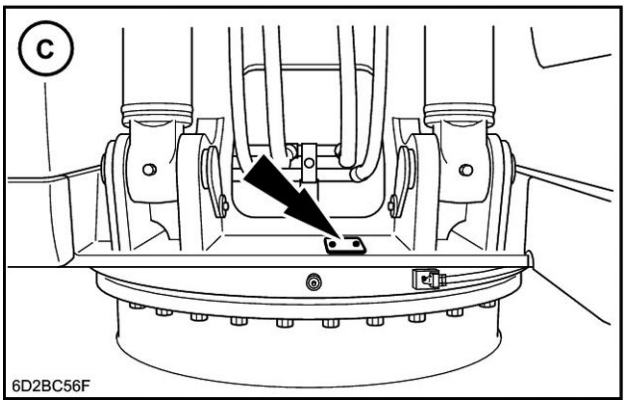

6D2BC56F 4

Every 2000 hours

Swing reduction gear: **(1)**

See "Greasing the swing reduction gear".

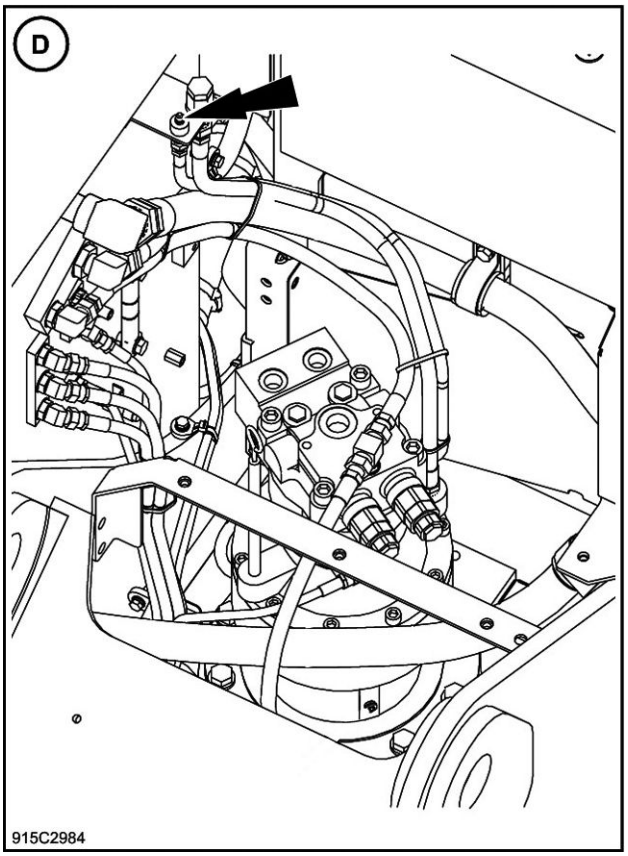

915C2984A 5

Attachment

Monobloc boom/arm

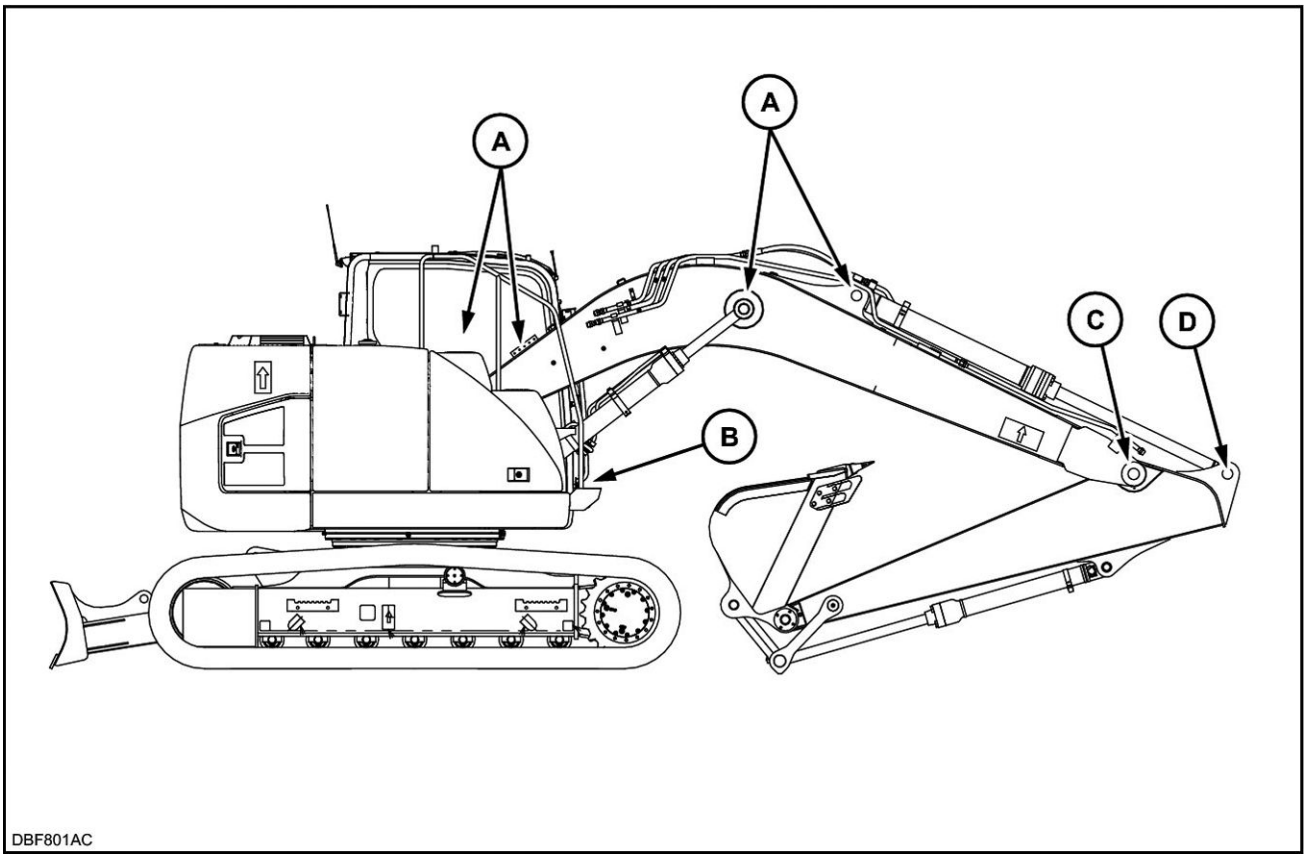

DBF801AC 6

ATTENTION: *If the following linkage points are not equipped with original parts, these points must be lubricated every 50 hours.*

Every 1000 hours

Boom bottom pin: **(2)**
Boom cylinder top pin: **(2)**
Arm cylinder bottom pin: **(1)**

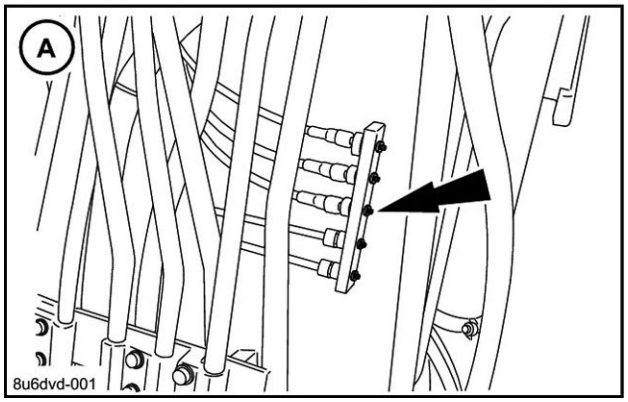

8U6DVD-001 7

Every 1000 hours

Boom cylinder bottom pin: **(2)**

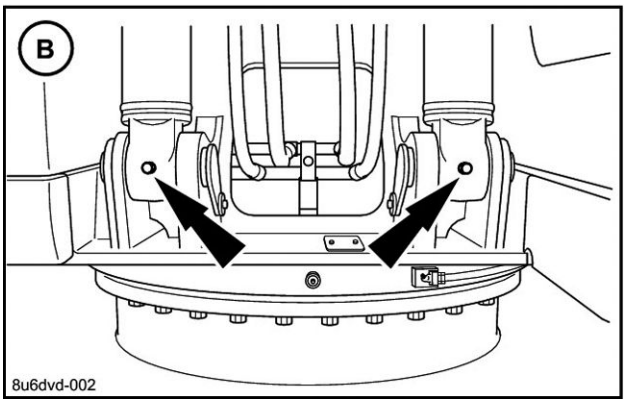

8U6DVD-002 8

Boom/arm linkage: **(2)**

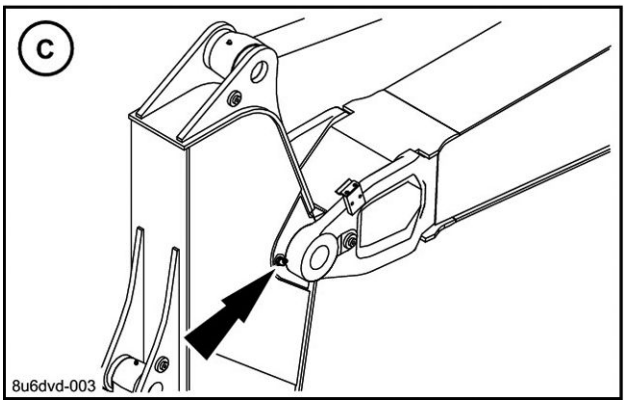

8U6DVD-003 9

Arm cylinder top pin: **(1)**

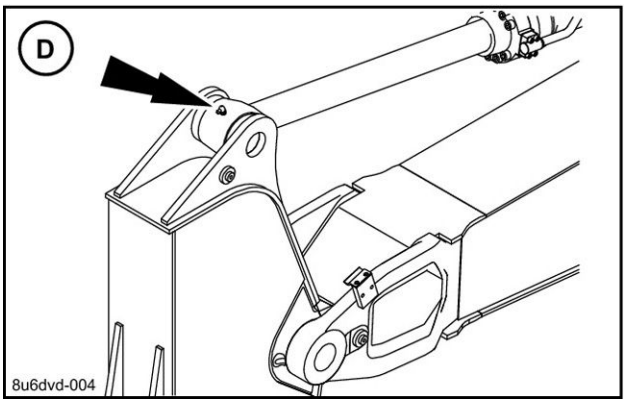

8U6DVD-004A 10

Offset boom/arm

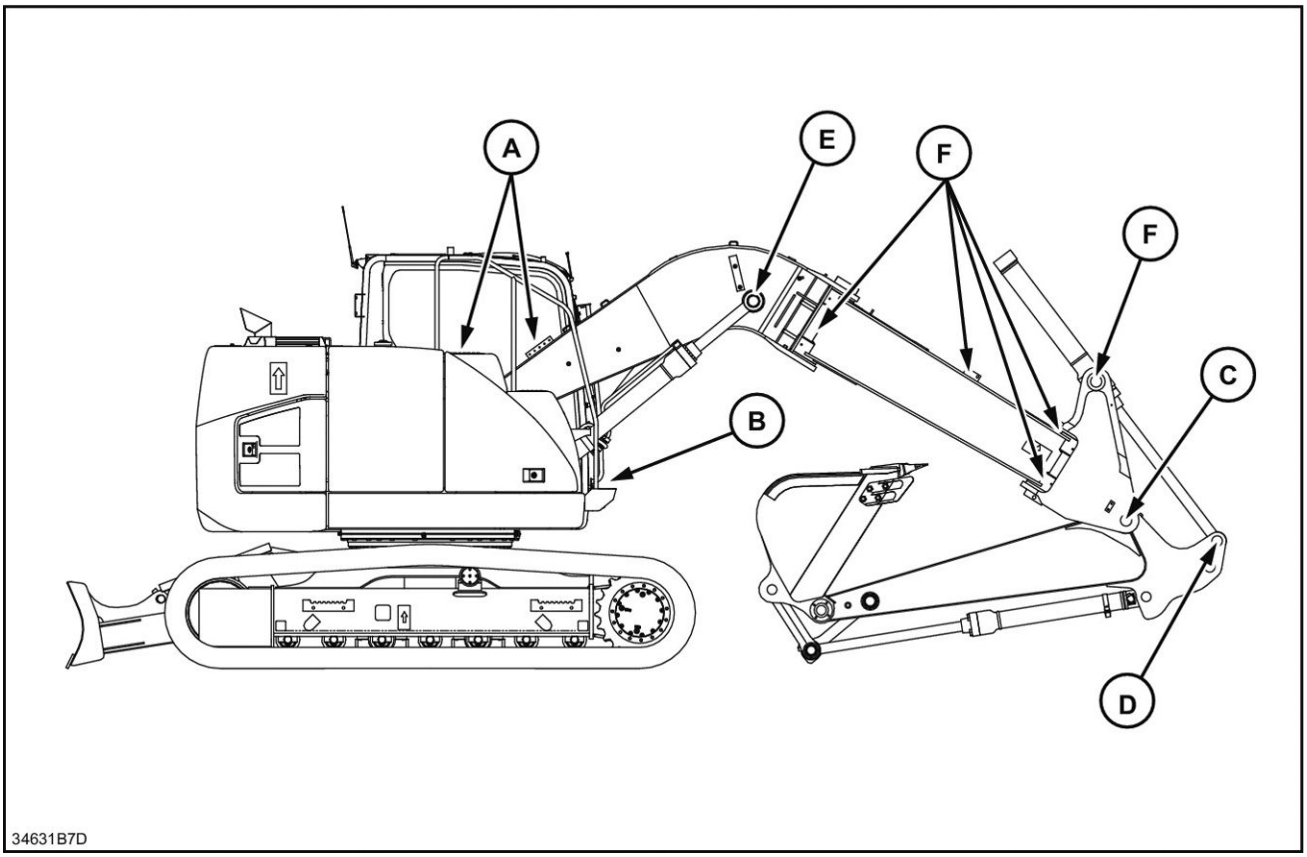

34631B7D 11

ATTENTION: *If the following linkage points are not equipped with original parts, these points must be lubricated every 50 hours.*

Every 1000 hours

Boom bottom pin: **(2)**
Boom cylinder top pin: **(2)**
Arm cylinder bottom pin: **(1)**

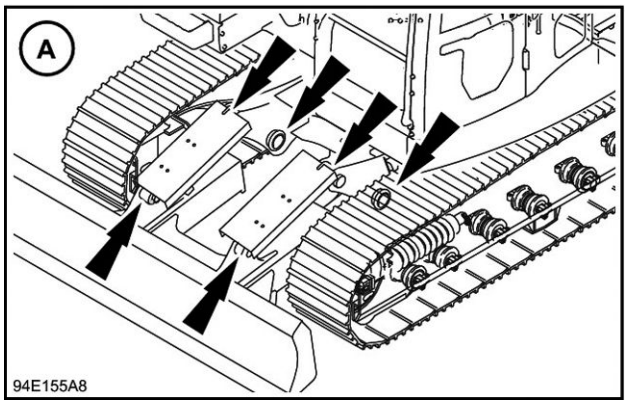

94E155A8 12

Every 1000 hours

Boom cylinder bottom pin: **(2)**

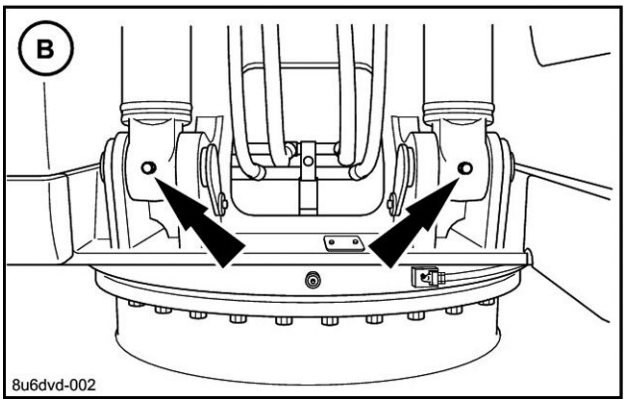

8U6DVD-002 13

Boom/arm linkage: **(3)**

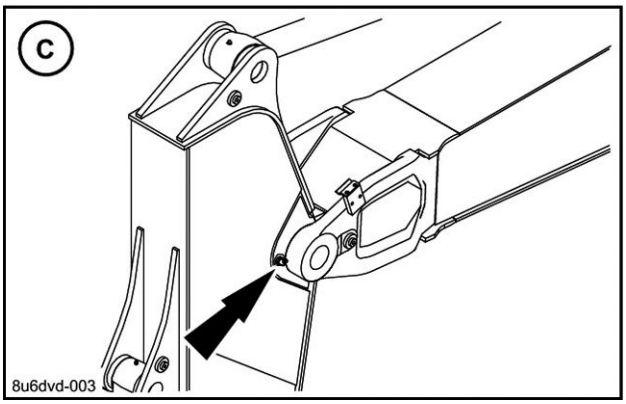

8U6DVD-003 14

Arm cylinder top pin: **(1)**

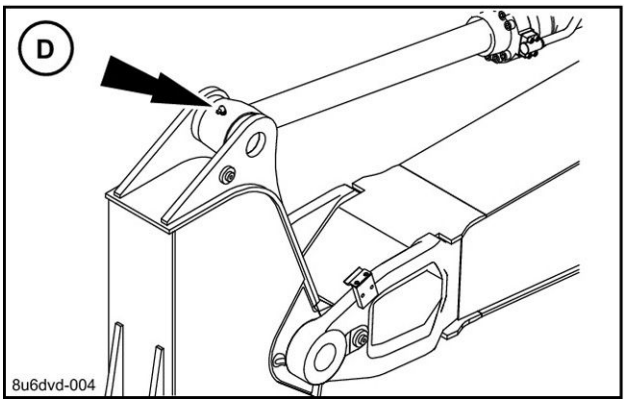

8U6DVD-004A 15

Every 50 hours

Boom cylinder top pin: **(2)**

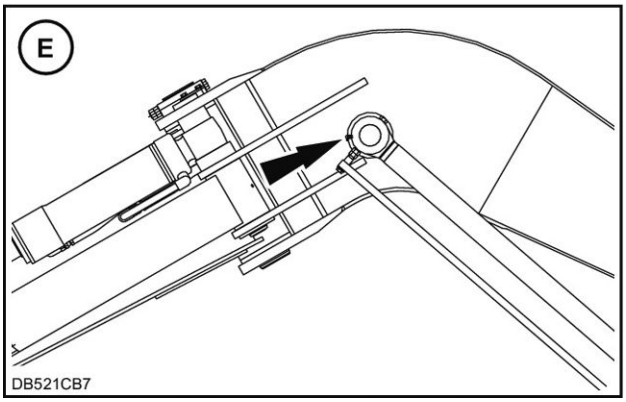

DB521CB7 16

Offset boom pin: **(10)**

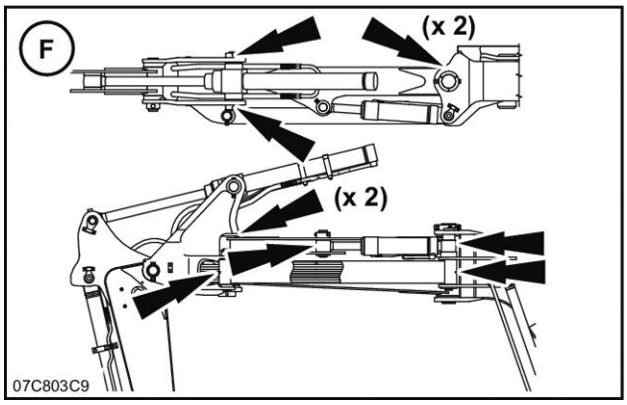

07C803C9 17

Arm/backhoe bucket

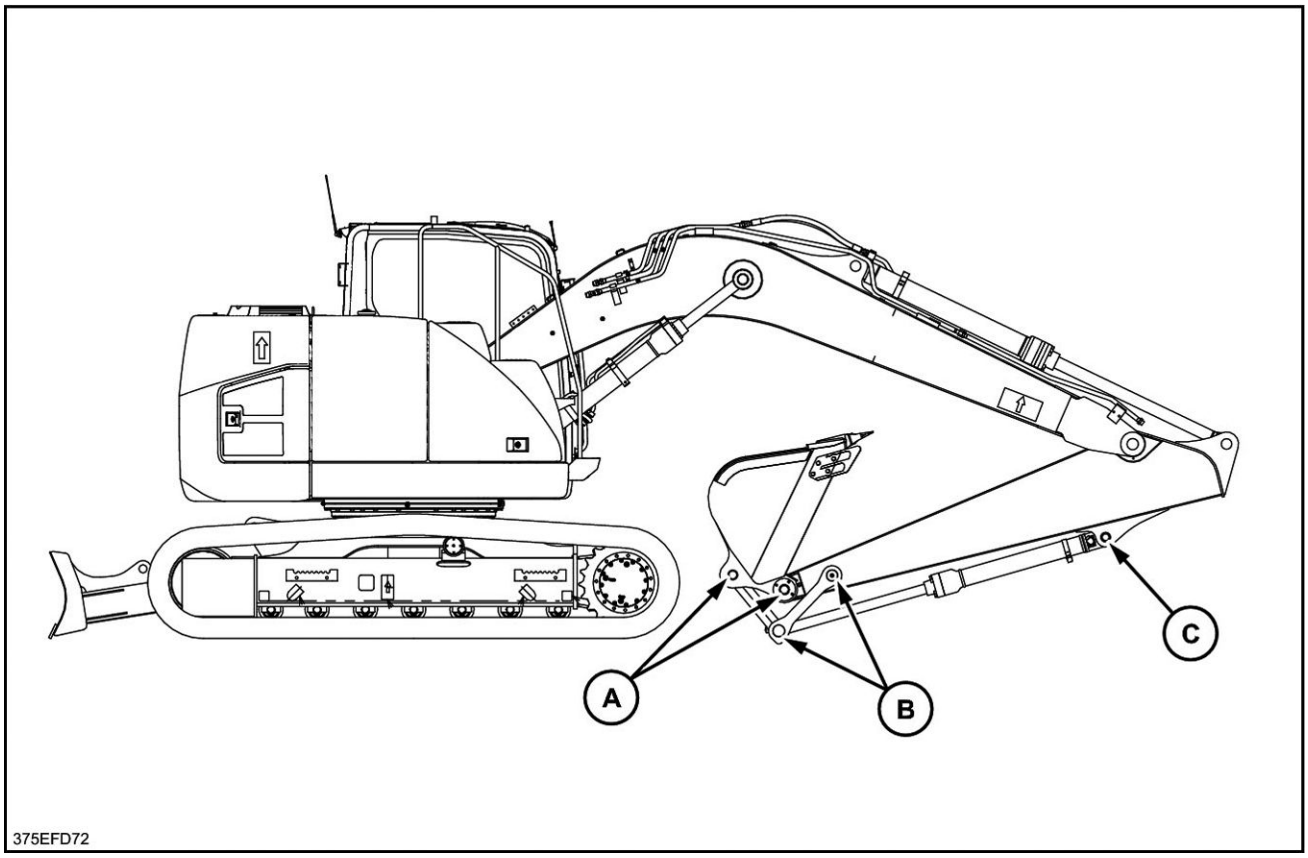

375EFD72 18

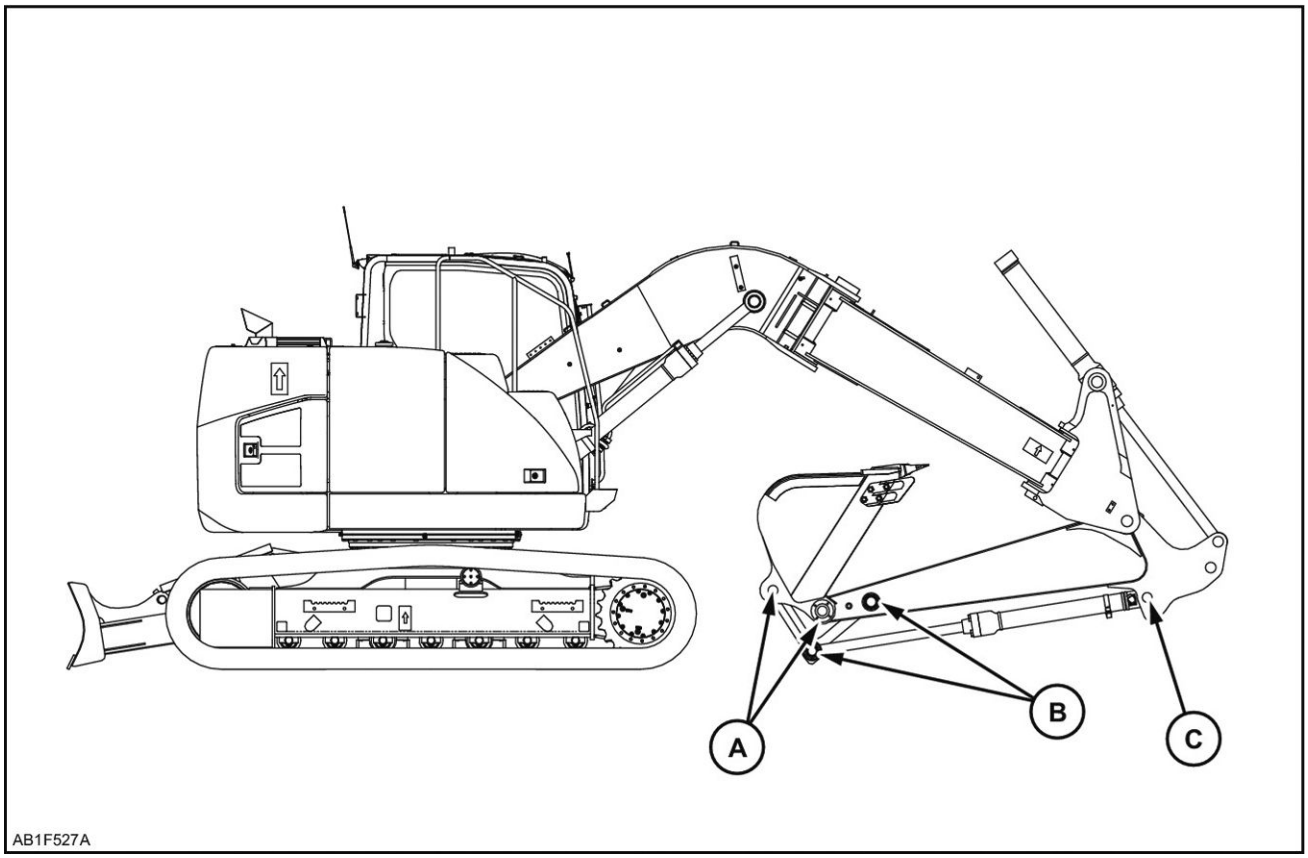

AB1F527A 19

ATTENTION: *If the following linkage points are not equipped with original parts, these points must be lubricated every 10 hours.*

Every 250 hours

Bucket linkages: **(2)**

ATTENTION: *If an accessory other than the bucket is installed, (hydraulic hammer, etc.) these points must be lubricated every 10 hours.*

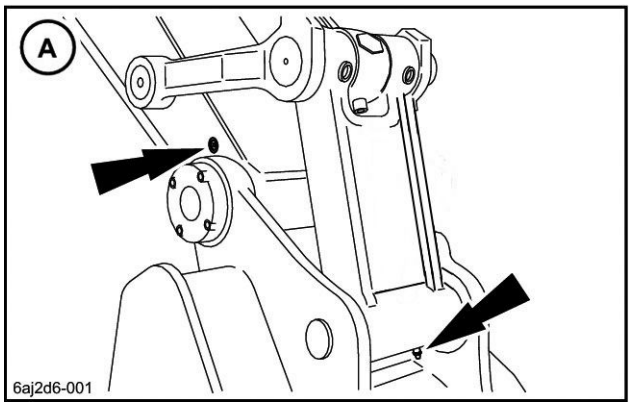

6AJ2D6-001B 20

ATTENTION: *If these linkage points are not equipped with original parts, these points must be greased every 50 hours.*

Every 1000 hours

Yoke/connecting rod linkages: **(4)**

ATTENTION: *If an accessory other than the bucket is installed, (hydraulic hammer, etc.) these points must be lubricated every 10 hours.*

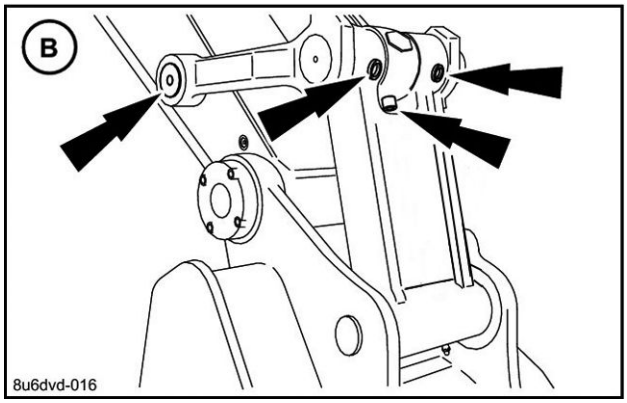

8U6DVD-016B 21

Bucket cylinder bottom pin: **(1)**

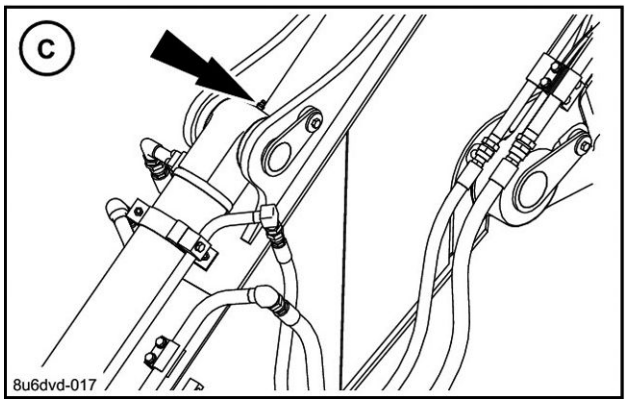

8U6DVD-017 22

Quick coupler tool (optional)

Type of grease: (refer to page **6-5**)

Every 50 hours

Cylinder bottom pin: **(1)**
Locking system pivot: **(1)**

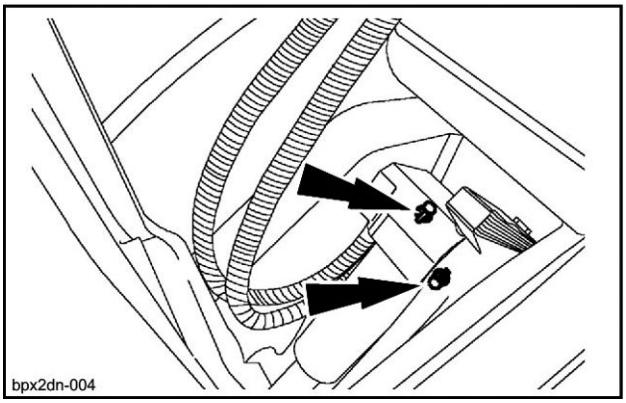

BPX2DN-004 23

Cylinder top: **(1)**

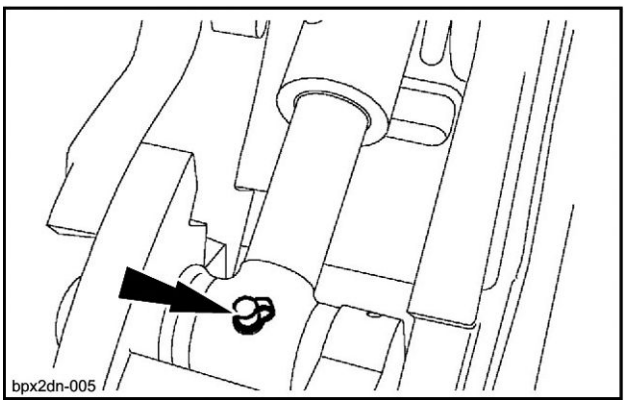

BPX2DN-005 24

Hook pivot: **(1)**

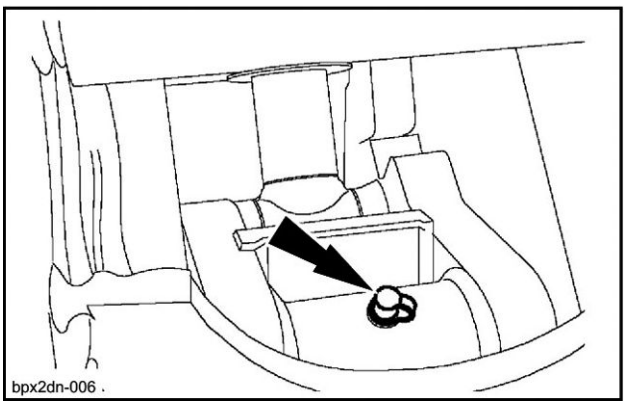

BPX2DN-006 25

Greasing the turntable teeth

Grease capacity: **9.9 kg** (**21.8 lb**)
Type of grease: (refer to page **6-5**)

Every 500 hours

Remove the inspection cover **(1)** and visually check the condition of the gear surface and for any damage.

If the gear surface is not well greased, add grease.

If the grease is white due to moisture content, etc. replace it with new grease.

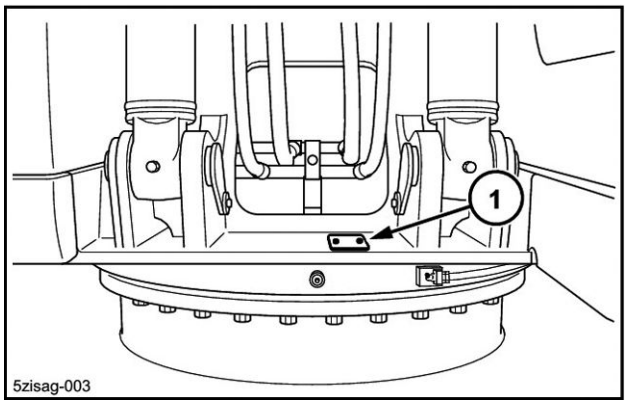

5ZISAG-003 26

If the presence of water is detected, remove the plug **(2)** and drain off the water.

1. Remove the protective panel from the lower central area.
2. Remove plug **(2)**.
3. Discharge the water or contaminated grease.
4. Install plug **(2)**.
5. Insert new grease through the port and install the inspection cover **(1)**.

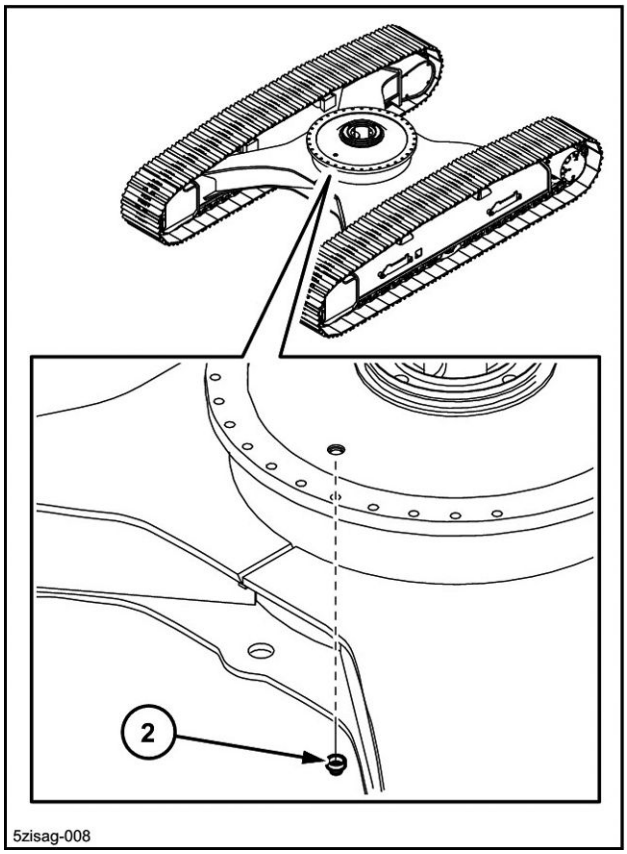

5ZISAG-008 27

Greasing the swing reduction gear

Grease capacity: **0.5 kg** (**1.1 lb**)
Type of grease: (refer to page **6-5**)

Every 2000 hours

1. Remove the air bleed plug **(1)** and refill with grease through the grease point **(2)**.
2. A certain amount of grease should run out from the air bleed plug **(1)**.
3. Install the air bleed plug **(1)**.

NOTICE: *When greasing, the inner seal will be damaged if the air bleed plug **(1)** is not remove.*

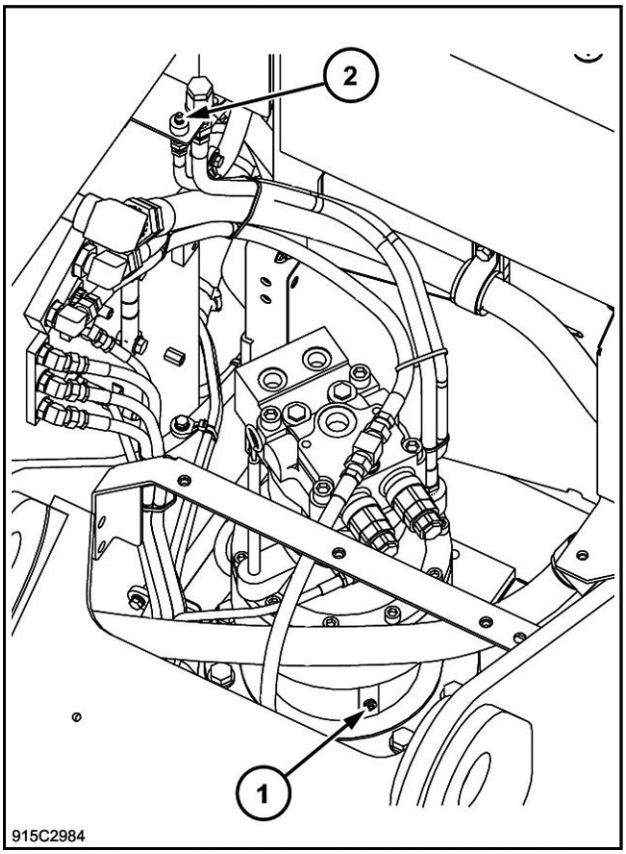

915C2984 28

Levels

Type of fluids and lubricants: (Refer to page **6-5**)

NOTE: *The numbers within brackets mentioned on the right of the description indicate the number of levels.*

Every 10 hours

Engine oil: **(1)**
Refer to page **6-24**.

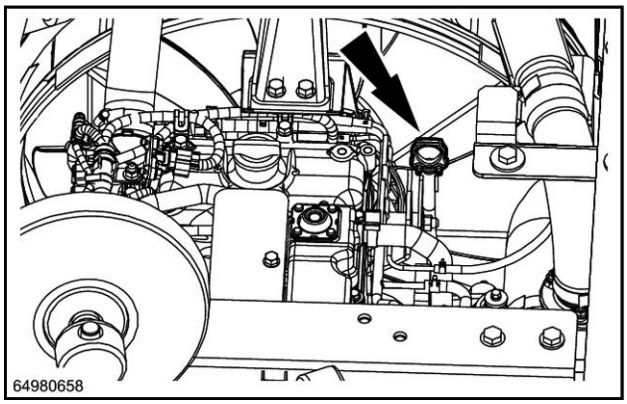

64980658 1

Coolant solution expansion reservoir: **(1)**
Refer to page **6-27**.

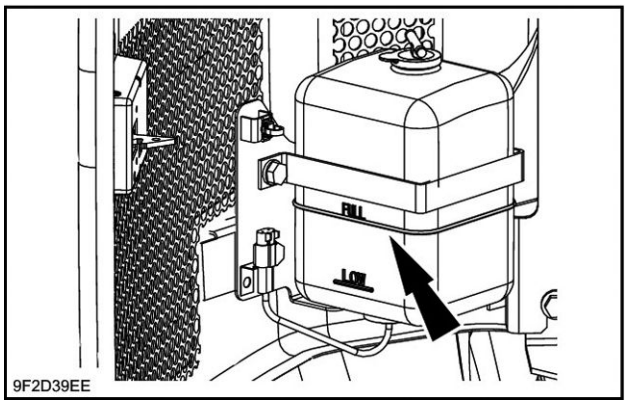

9F2D39EE 2

Hydraulic reservoir: **(1)**
Refer to page **6-39**.

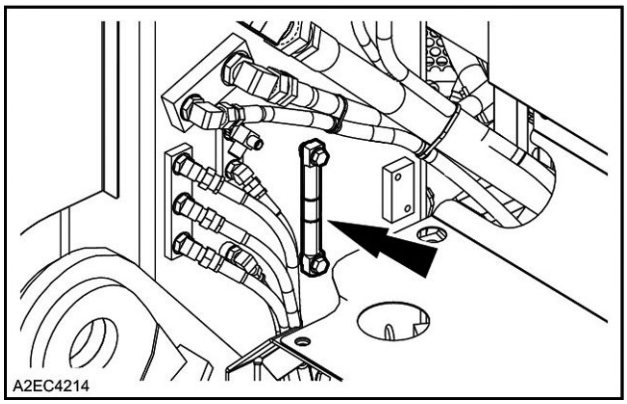

A2EC4214 3

Every 250 hours

Batteries: **(2)**
Refer to page **6-80**.

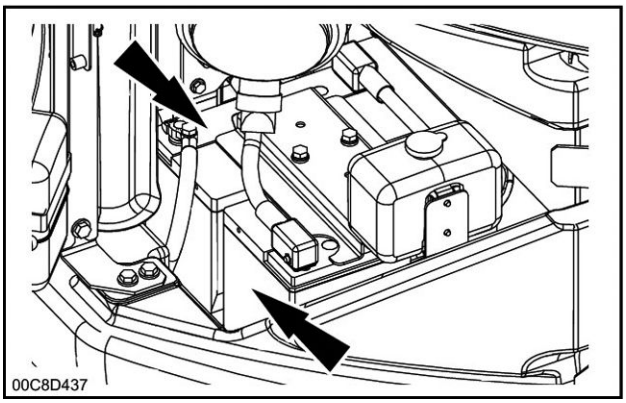

00C8D437 4

Travel reduction gears: **(2)**

1. Drain
2. Level
3. Fill

Refer to page **6-54**.

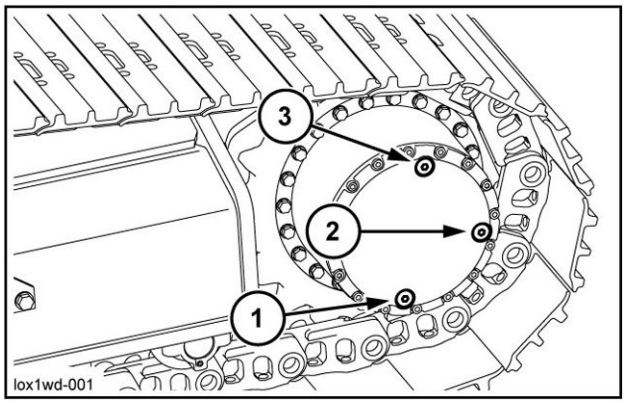

LOX1WD-001 5

Swing reduction gear: **(1)**
Refer to page **6-51**.

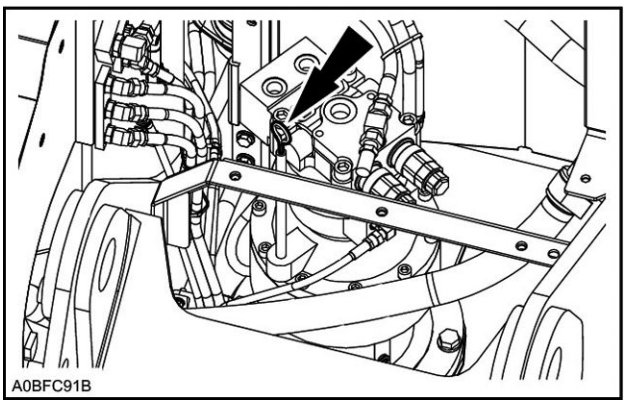

A0BFC91B 6

Engine

Engine oil level check: Every 10 hours or every day
Oil replacement: Every 500 hours
Oil filter replacement: Every 500 hours
Oil capacity: **17 l** (**4.5 US gal**)
Type of oil: **CASE TUTELA LE ENGINE OIL** (Refer to page **6-5**)

Level

1. Park the machine on flat, horizontal ground. Stop the engine, remove the ignition key.
2. When the engine has been stopped for fifteen minutes, raise and lock the engine hood, remove the dipstick, wipe it with a clean cloth and insert it back in the guide tube as far as it will go. Then take it out again.

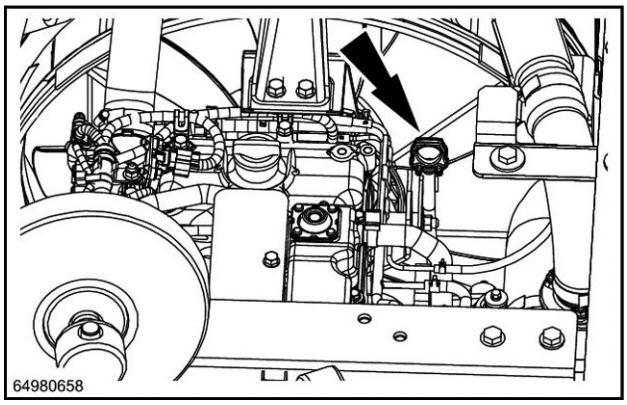

64980658 1

3. If the level is situated between the marks **(A)** and **(B)** on the dipstick, the level is correct.

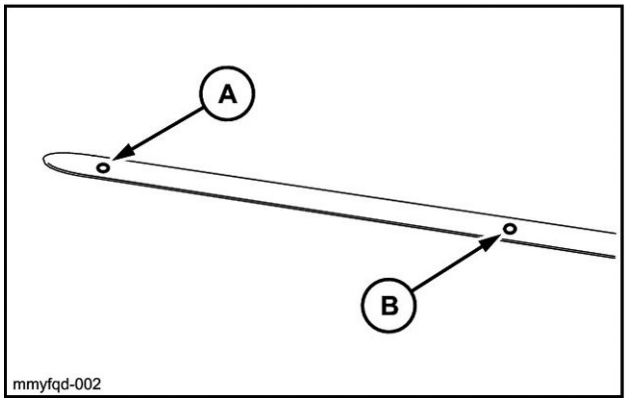

MMYFQD-002 2

4. If the oil level is at mark **(A)** (min) or below, remove the filling plug and add oil up to mark **(B)** (max) of the dipstick, install the plug.

ATTENTION: *The level should not be higher than the mark* ***(B)*** *(maximum on the dipstick).*

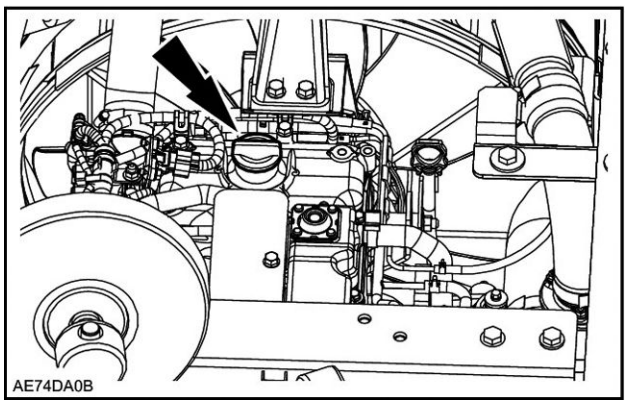

AE74DA0B 3

Draining, changing the oil filter and filling

NOTE: *Change the oil while the engine is still warm. The oil will flow more easily.*

Use the extension drain hose from the front boot.

1. Place the machine on flat, level ground. Stop the engine, remove the ignition key then open the hatch under the engine.
2. Raise and lock the engine hood, remove the filling plug.

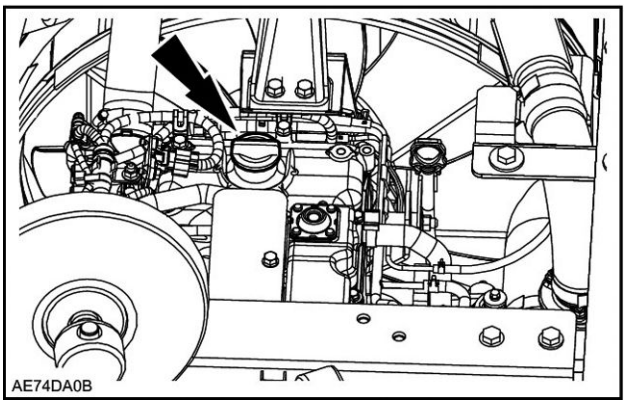

AE74DA0B 4

3. Remove the protective cap from the engine housing drain valve.
4. Screw the end of the extension drain hose onto the engine check valve, place the other end in a container of suitable capacity and allow the oil to flow out.
5. Remove the extension drain hose and install the protective cap on the housing check valve. Place the extension drain hose in the front storage compartment.

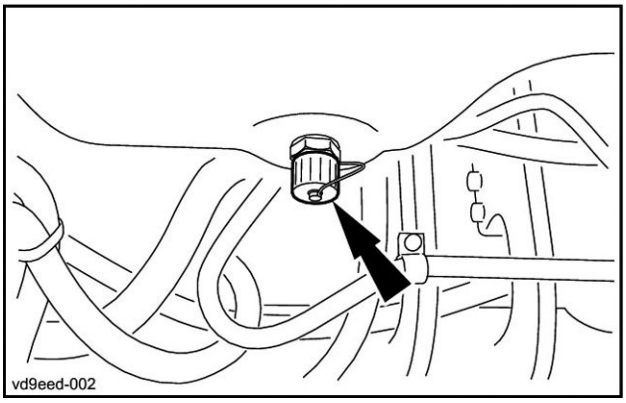

VD9EED-002 5

6. Clean the area around the filter located in the rear right-hand compartment, remove it using a filter wrench.

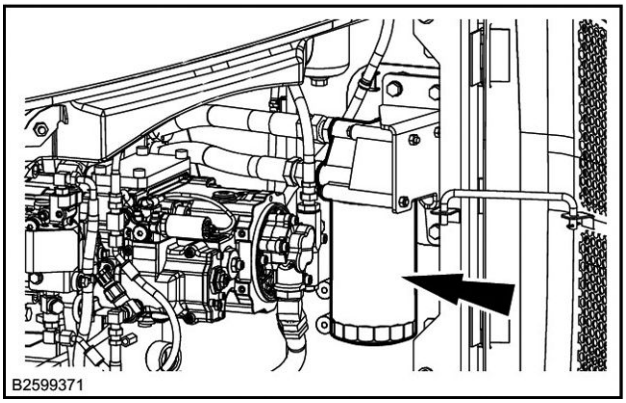

B2599371 6

7. Coat the seal of the new filter with a fine film of oil.
8. Install the new filter. Turn the filter until the seal comes into contact with the filter head then tighten an extra half turn by hand.

   ATTENTION: *Do not use a filter wrench to tighten the filter. Excessive tightening can damage the filter and their seals.*

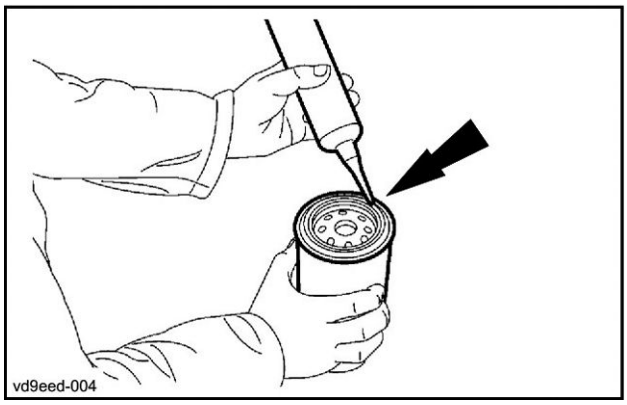

VD9EED-004 7

9. Fill the engine with new engine oil. Install the filling plug.
10. Run the engine for a few minutes and check that there are no leaks. Check the level again and top up if necessary.

    NOTICE: *Always wait fifteen minutes to allow the oil to return to the sump before checking the oil level.*

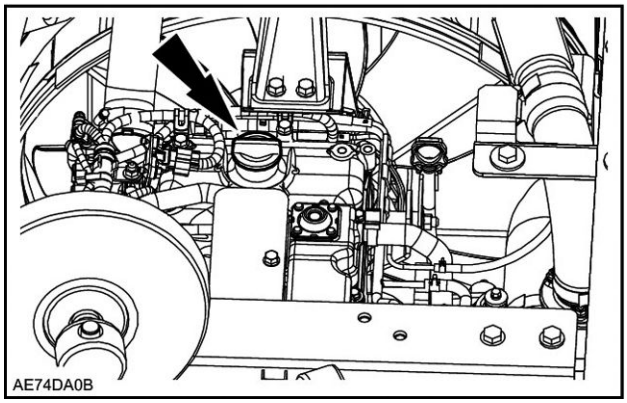

AE74DA0B 8

Cooling system

⚠ CAUTION

Burn hazard!
Take care if removing the filler cap while the system is hot. Before removing the cap: completely cover the cap using a thick cloth, and slowly open the filler cap to allow the pressure to escape. Do not add cold water to a hot coolant reservoir.
Failure to comply could result in minor or moderate injury.

C0031A

⚠ WARNING

Hazardous chemicals!
Coolant can be toxic. Avoid contact with skin, eyes, and clothing. Antidotes:
EXTERNAL - Rinse thoroughly with water. Remove soiled clothing.
INTERNAL - Rinse the mouth with water. DO NOT induce vomiting. Seek immediate medical attention.
EYES - Flush with water. Seek immediate medical attention.
Failure to comply could result in death or serious injury.

W0282A

Service specifications

Expansion reservoir level check: Every 10 hours or every day
Checking the tightening of clamps, of radiator hoses: Every 250 hours or every 6 months
Draining the system (long duration): Every 1000 hours or every 2 years
Draining the system (with anti-freeze) (spring and autumn): Twice a year
System capacity: **15.3 l** (**4.0 US gal**)
Type of coolant: (Refer to page **6-5**)

NOTICE: *Check and service the cooling system according to the instructions given in this manual.*

Coolant solution

Put only ethylene-glycol coolant solution in the cooling system. Use good quality ethylene-glycol that has a high boiling point, with no additives to prevent leakage. Do not use non-approved anti-rust additives. Anti-rust additives and ethylene-glycol can mix and work against each other, thereby reducing anti-corrosion protection, forming deposits in the cooling system and causing damage to the cooling system and radiator.
Consult your CASE CONSTRUCTION Dealer who will supply you with the suitable coolant.

Level

The level of coolant solution should be checked when the engine is cold.

On flat, level ground, before using the machine (while the engine is still cold), the level in the expansion reservoir should be between the **“Full” (1)** and **“Low” (2)** marks. If not, see "Filling".

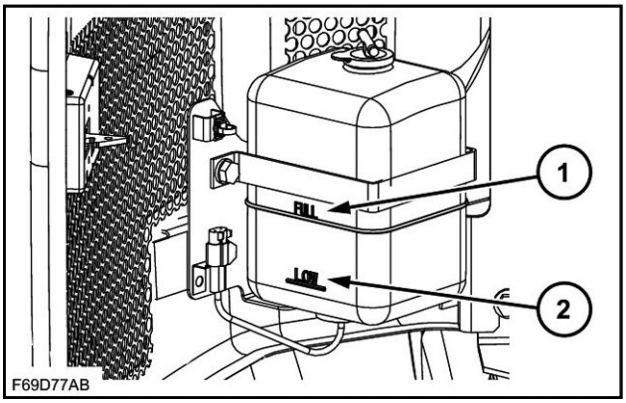

F69D77AB 1

Draining

⚠ CAUTION

Burn hazard!
Hot coolant can spray out if you remove the filler cap while the system is hot. After the system has cooled, turn the filler cap to the first notch and wait for all pressure to release before proceeding.
Failure to comply could result in minor or moderate injury.

C0043A

1. Remove the radiator plug.

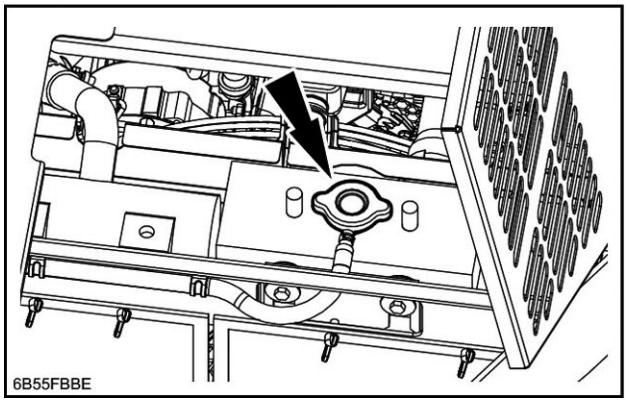

6B55FBBE 2

2. Open the radiator drain valve located on the engine side of the radiator.

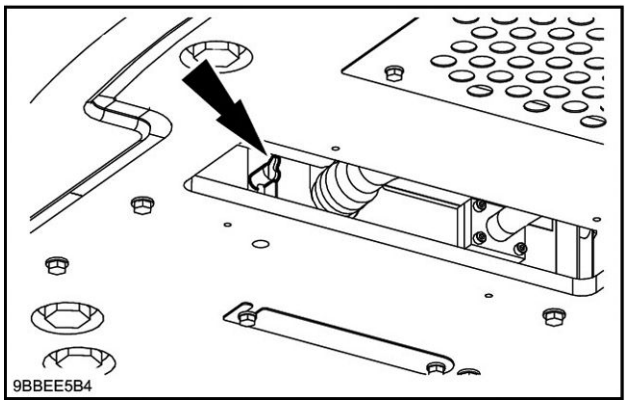

9BBEE5B4 3

3. Open the drain plug located on the engine block.

   NOTE: *Have a receptacle of a suitable capacity ready.*

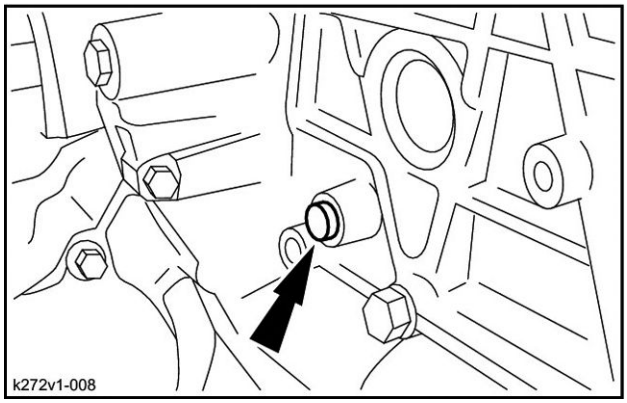

K272V1-008 4

Rinsing

1. Close the drain valve once the radiator is completely empty. Close the plug on the engine block.
2. Fill the system with clean water. Install the radiator cap.
3. Start the engine. Run the engine at a speed slightly higher than idle speed for ten minutes to bring the engine temperature up to about **80 °C** (**176.0 °F**) .
4. Stop the engine and remove the ignition key.
5. Drain the system once more.
6. Repeat Steps 1 to 5 until the water drained is clear.

Filling

1. Fill with coolant solution via the radiator until overflowing and install the radiator cap.

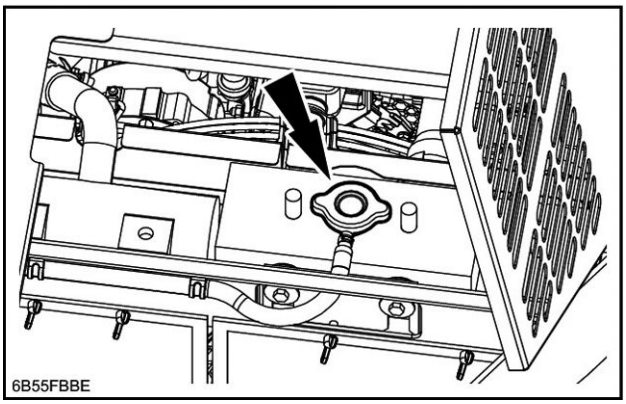

6B55FBBE 5

2. Fill the expansion reservoir to the **"Full"** mark and install the cap.

   ATTENTION: *Use the correct coolant solution.*

3. Run the engine at idle speed for about five minutes. Add coolant solution if the level in the expansion reservoir drops.

   ATTENTION: *Do not fill the expansion reservoir above the **"Full"** mark.*

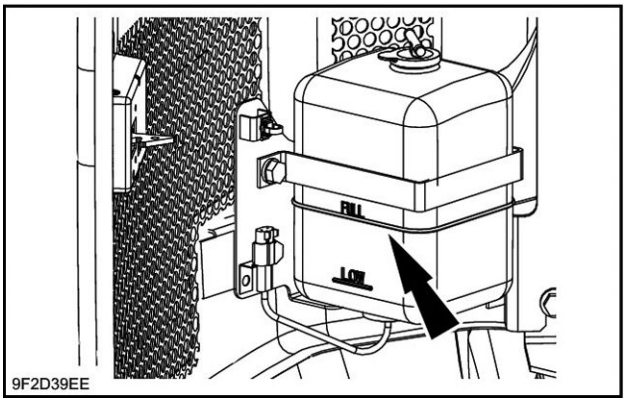

9F2D39EE 6

Fuel system

Service specifications

Fuel tank draining: Every 10 hours or every day
Pre-filter bleeding: When the float reaches the level **(A)**
Replace the pre-filter element: Every 250 hours
Replace the filter element: Every 500 hours
Electromagnetic feed pump filter cleaning: Periodically
Fuel tank capacity: **200 l** (**52.8 US gal**)
Type of fuel: (Refer to page **6-5**)

ATTENTION: *Take all necessary precautions during the following operations; no foreign matter must enter the fuel system.*

ATTENTION: *When you deal with fuel, please do not bring fire close. After exchange of the filter and scupper of fuel should wipe off the fuel which fell.*

NOTICE: *Do not work in any environment in which anything other than fuel will get into fuel lines. (Sites with strong wind, blowing dust, etc.). Wash hands before operations. Do not use gloves. Do not open the packaging for the filter kit until you start the installation work. Do not reuse any fuel remaining within the cover. For persistent dirt within the cover, wipe it off with a clean rag, then clean with clean diesel fuel. Do not use parts cleaner because it could affect the case cover. Do not touch the inside of the element. Completely wipe off any spilt fuel after changing a filter element or bleeding the system.*

Draining the fuel tank

1. Place a receptacle of a suitable capacity under the drain plug.
2. Open the drain valve located at the bottom of the tank and drain the accumulated sediment and water.
3. After draining, close the drain valve.

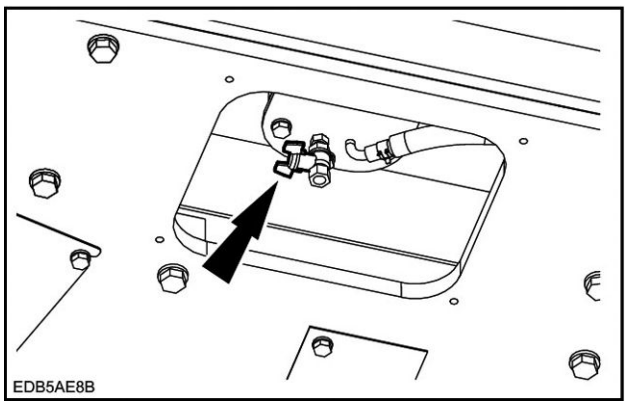

EDB5AE8B 1

Pre-filter bleeding

When the float reaches the level line **(A)**:

1. Place a receptacle of a suitable capacity under the pre-filter.
2. Loosen the drain plug **(1)** and the bleed screw **(2)** then drain the water and sediment.
3. When the float **(3)** settles on the bottom, tighten the drain plug **(1)** and the bleed screw **(2)**.
   Tightening torque: **8 - 12 N·m** (**5.9 - 8.9 lb ft**)

   ATTENTION: *Overtightening can damage the seal.*
4. Check for any signs of leak.

NOTICE: *In cold weather, the water can freeze on the top part of the bowl. Bleed after the ice has melted.*

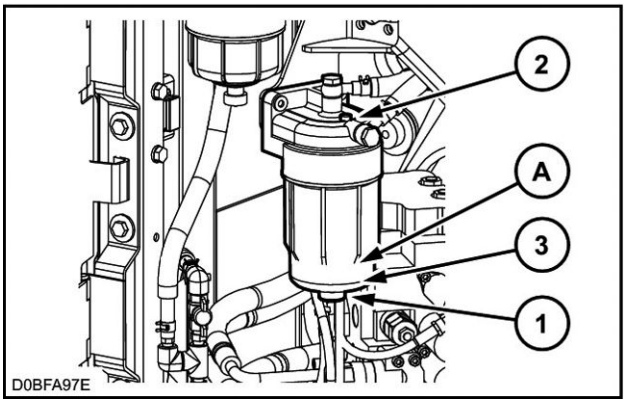

D0BFA97E 2

Replacing the pre-filter element

ATTENTION: *If a fuel filter other than a genuine CASE CONSTRUCTION filter is used, the guarantee will not be applied to a fault caused by the use of a wrong filter.*

1. Place a receptacle of a suitable capacity under the pre-filter.
2. Close the valve **(1)** on the supply line.

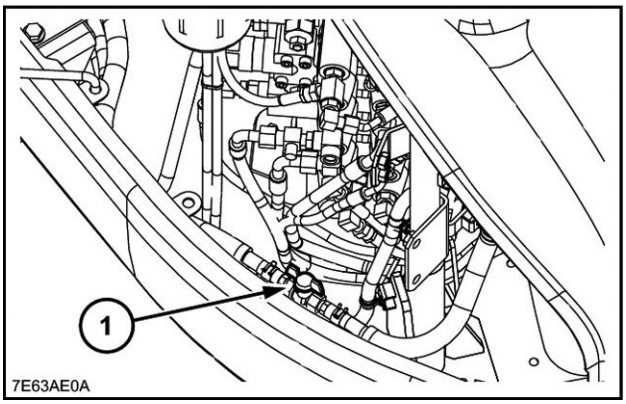

7E63AE0A 3

3. Loosen the drain plug **(2)** and the bleed screw **(3)** then drain the fuel and sediments from the pre-filter.

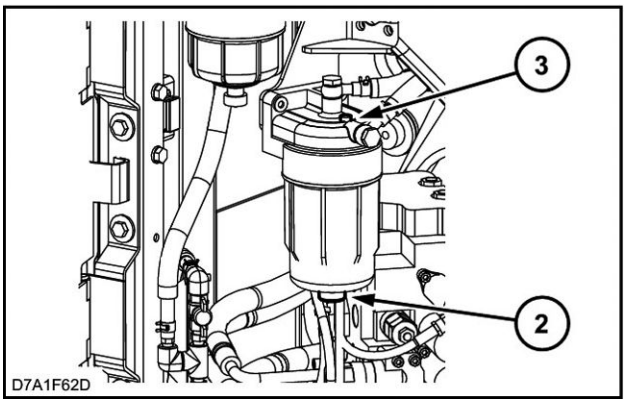

D7A1F62D 4

4. Clean around the pre-filter body then remove it using the wrench provided with the machine.
5. Install the new filter element. Replace the filter body seal, then install the body, turning it until it is in contact with the pre-filter head.

   ATTENTION: *Do not fill the filter body with fuel before installing.*
6. Tighten the body using the wrench, the tightening torque must be from **28 - 32 N·m** (**20.7 - 23.6 lb ft**).

NOTE: *Bind tight within regulation torque.*

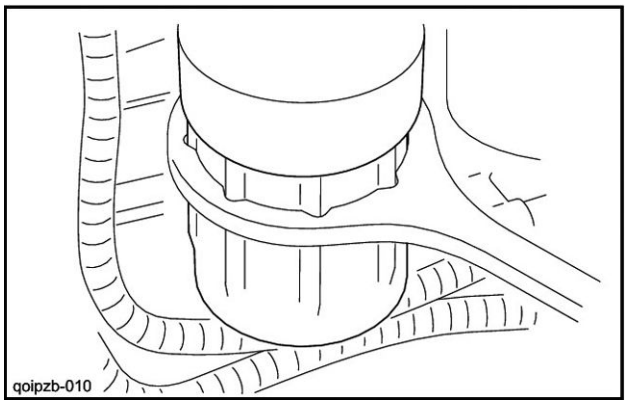

QOIPZB-010 5

7. Replace the drain plug **(2)** seal then install the drain plug **(2)**; the tightening torque must be between **8 - 12 N·m** (**5.9 - 8.9 lb ft**)

   ATTENTION: *Overtightening can damage the seal.*

   ATTENTION: *Never re-use the seals of the filter body or the drain plug **(2)**; they must always be replaced with new seals.*

NOTE: *Bind tight within regulation torque.*

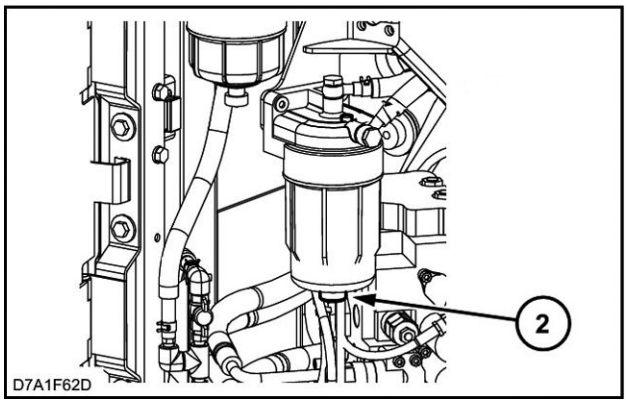

D7A1F62DA 6

8. Open the valve **(1)** on the supply line.
9. Bleed the system. See "Fuel system air bleed".

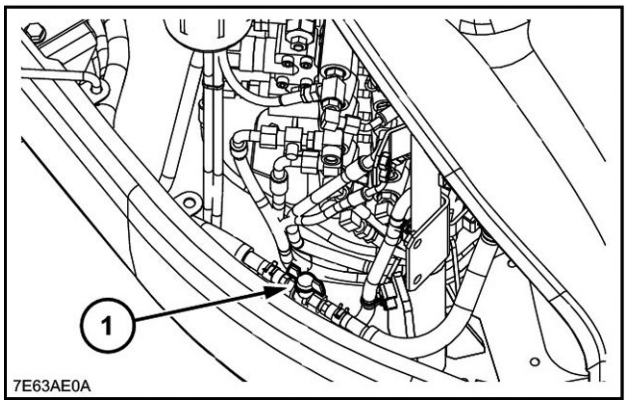

7E63AE0A 7

Replacing the fuel filter element

Replace the fuel filter element at the same time as pre-filter element.

ATTENTION: *If a fuel filter other than a genuine CASE CONSTRUCTION filter is used, the guarantee will not be applied to a fault caused by the use of a wrong filter.*

1. Place a receptacle of a suitable capacity under the fuel filter.

2. Close the valve **(1)** on the fuel tank line and close the valve **(2)** on the engine line.

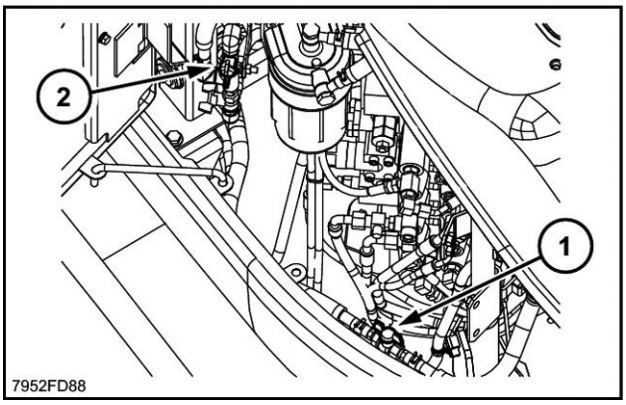

7952FD88 8

3. Clean around the fuel filter body.

   NOTICE: *Never use the cleaner because that can cause damage.*

4. Loosen the drain plug **(3)** and the bleed screw **(4)**.

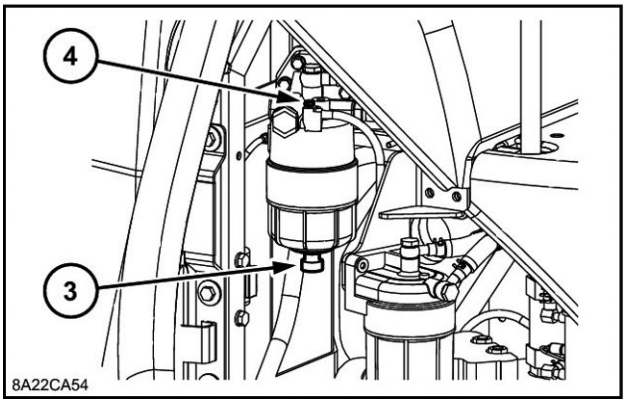

8A22CA54 9

5. Clean around the fuel filter body then remove it using the wrench provided with the machine.
6. Install the new fuel filter element. Replace the fuel filter body seal, then install the body, turning it until it is in contact with the fuel filter head.

   ATTENTION: *Do not fill the filter body with fuel before installing.*

7. Tighten the body using the wrench, the tightening torque must be from **28 - 32 N·m** (**20.7 - 23.6 lb ft**).

NOTE: *Bind tight within regulation torque.*

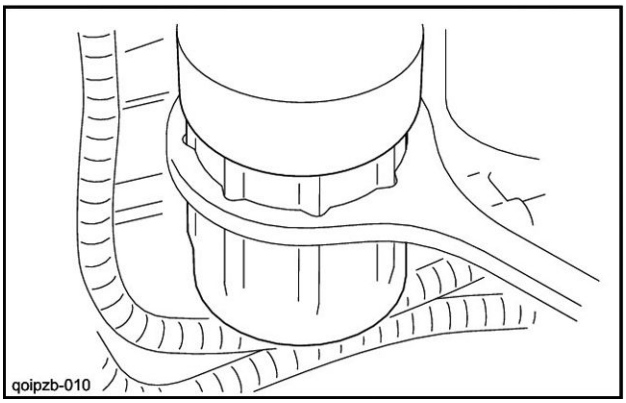

QOIPZB-010 10

8. Replace the drain plug **(3)** seal then install the drain plug **(3)**; the tightening torque must be between **8 - 12 N·m** (**5.9 - 8.9 lb ft**)

   ATTENTION: *Overtightening can damage the seal.*

   ATTENTION: *Never re-use the seal of the filter body or the drain plug **(3)**; they must always be replaced with new seal.*

NOTE: *Bind tight within regulation torque.*

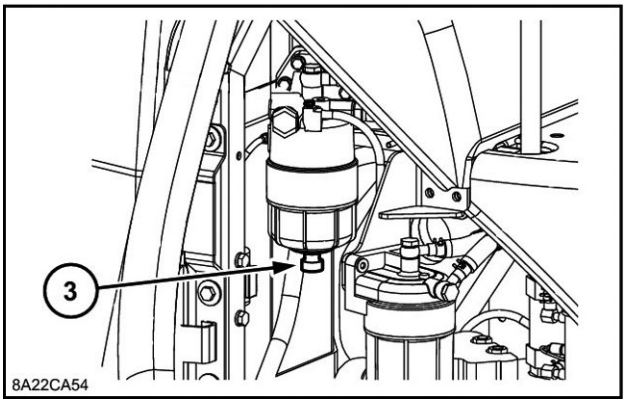

8A22CA54A 11

9. Open the valve **(1)** on the fuel tank line and open the valve **(2)** on the engine line.

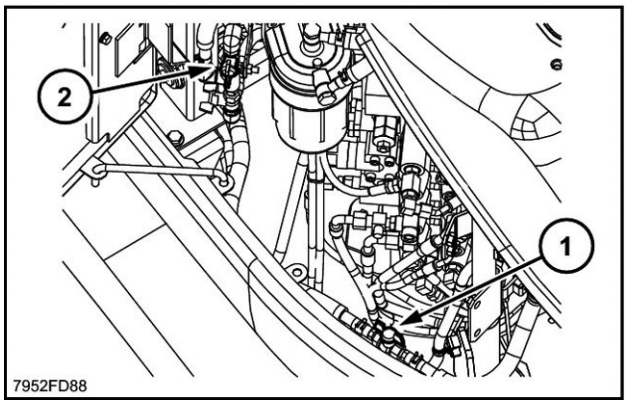

7952FD88 12

Fuel system air bleed

NOTICE: *When the fuel tank has been emptied after replacement and/or draining water of the pre-fuel filter or the fuel filter **(4)** has been carried out, be sure to bleed air as this may prevent fuel flow because of air entering inside.*

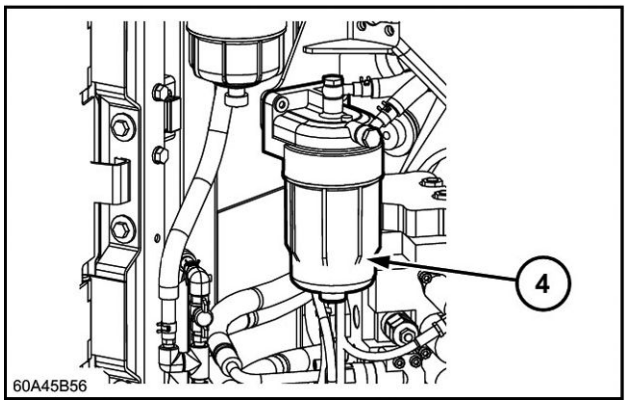

60A45B56 13

1. Place a receiving container under the end of fuel drain hose.
2. Set each cock of **(A)**, **(B)** and **(C)** as follows.
   Cock **(A)** (fuel tank): Open
   Cock **(B)** (engine): Close
   Cock **(C)** (drain): Open

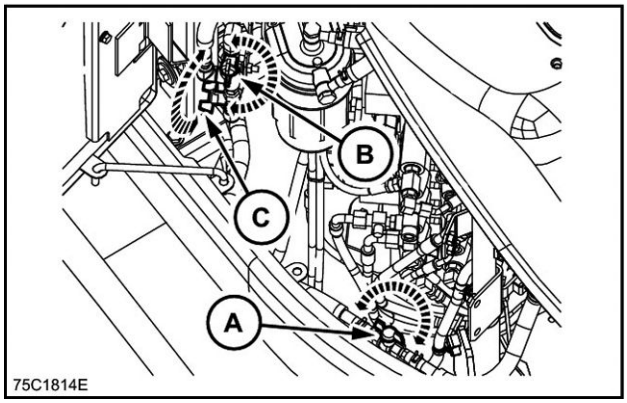

75C1814E 14

3. Loosen the air bleeding plug **(2)** on fuel filter. Do not loosen the air bleeding plug of the pre fuel filter.
4. Insert the key into the ignition switch and turn the key to the **"On"** position. Electromagnet feed pump operates by this.

   ATTENTION: *Do not turn **"On"** the ignition key for more than 5 minutes unless bleeding air has been completed. Otherwise, this may cause breakdown of the electromagnetic fuel pump.*
5. Turn the handle of the feed pump **(1)** to the left and it will spring up due to the spring inside the handle.

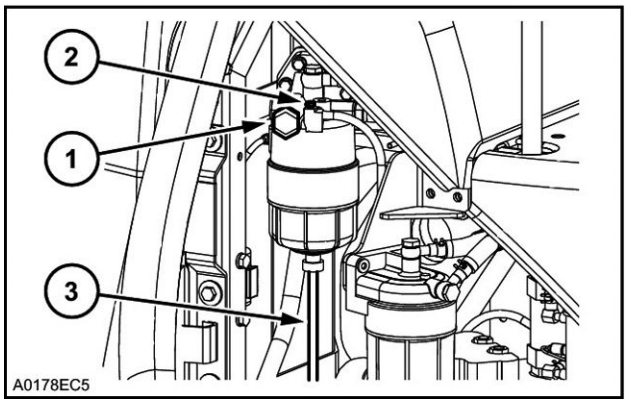

A0178EC5 15

6. Move this handle and expel from the drain hose **(3)** the fuel with which air bubbles were mixed. This action is the back-up of electromagnet feed pump **(4)**. Move this handle until air bubbles are lose in fuel.
7. Turn **"Off"** the ignition key.

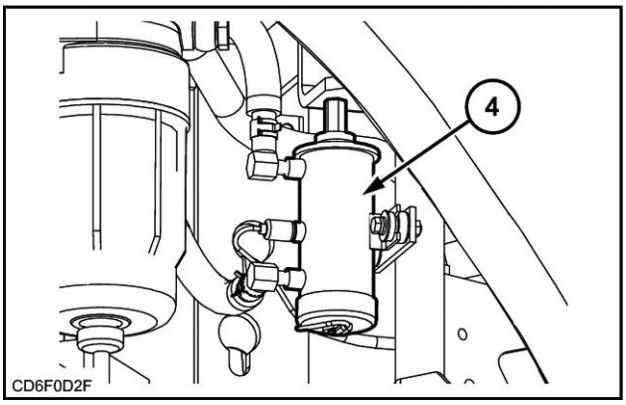

CD6F0D2F 16

8. Next, tighten the air bleeding plug **(2)** which had been loosened in step 3 and continue to move the feed pump **(1)** handle. When the handle becomes difficult to move, air bleeding is completed. Air bleeding : **8 - 12 N·m** (**5.9 - 8.9 lb ft**).
9. Push in the handle of the feed pump **(1)** to return it to its original position.
10. Turn **"On"** the ignition key to operate the electromagnetic feed pump draining the contaminant (impurities) in the fuel pipes for more than 30 seconds.

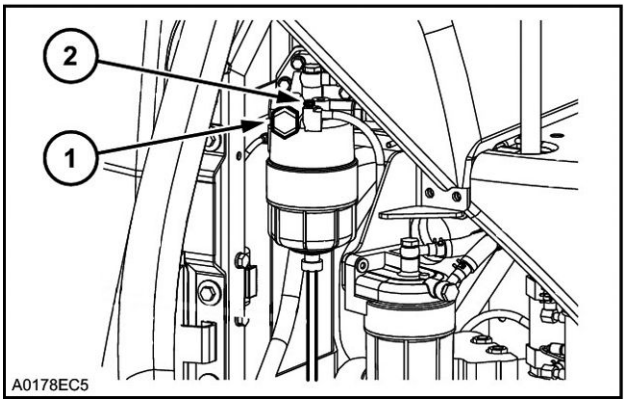

A0178EC5A 17

11. Set each cock of **(A)**, **(B)** and **(C)** as follows.
    Cock **(A)** (fuel tank): Open
    Cock **(B)** (engine): Open
    Cock **(C)** (drain): Close
12. Completely wipe off any spilled fuel, start the engine and check for any fuel leakage.

    ATTENTION: *Tightening it with torque exceeding the specified may cause the rubber section of gasket to be damaged.*

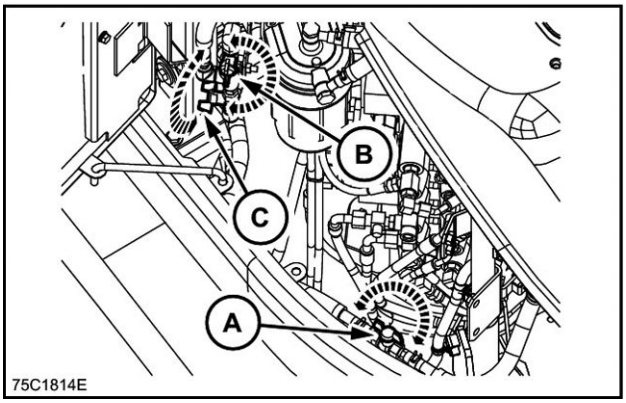

75C1814E 18

Cleaning the electromagnetic feed pump filter

1. Located near the fuel filter, place a receptacle of suitable capacity under the electromagnetic feed pump.

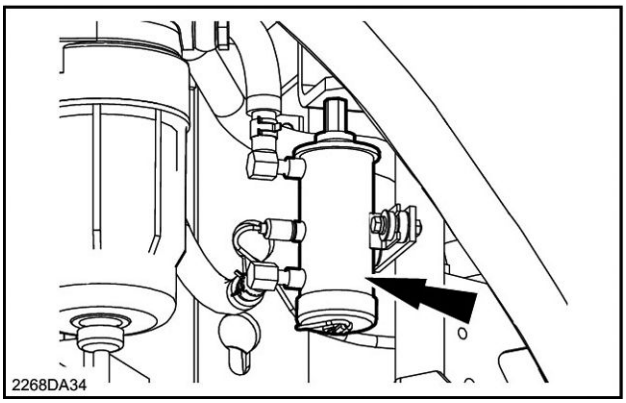

2268DA34 19

2. Close the valve on the supply line then remove the electromagnetic feed pump.

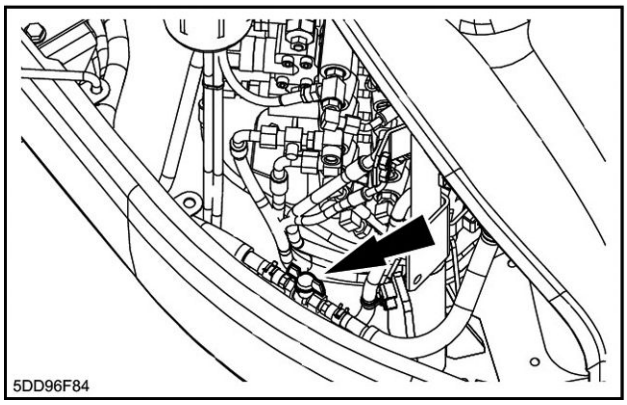

5DD96F84 20

3. Open the pump body and extract the filter **(3)** and the seals **(2)** and **(4)**.

⚠ WARNING

Flying debris!
Compressed air can propel dirt, rust, etc. into the air. Wear eye and face protection when using compressed air.
Failure to comply could result in death or serious injury.

W0307A

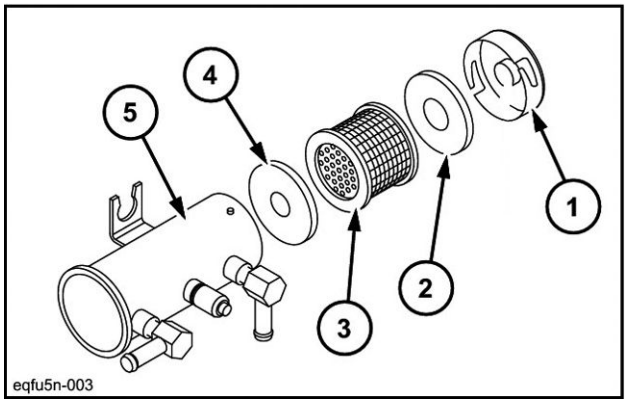

EQFU5N-003A 21

4. Clean the filter with compressed air. Check the filter and replace it if necessary. Replace the seals with new seals.
5. Carefully clean the body **(5)** and the cover **(1)**. No dirt must remain in the supply pump.
6. Re-assemble, taking care to install the seals in the correct order then re-install the pump.
7. Open the valve on the supply line.
8. Bleed the system. See "Replacing the fuel filter element".

Releasing pressure in the hydraulic system

ATTENTION: *Before carrying out any work on the hydraulic system, there should be no pressure in any of the circuits.*

1. Place the machine on flat, level ground, lower the attachment to the ground and stop the engine.
2. Turn the ignition key to the **"On"** position.

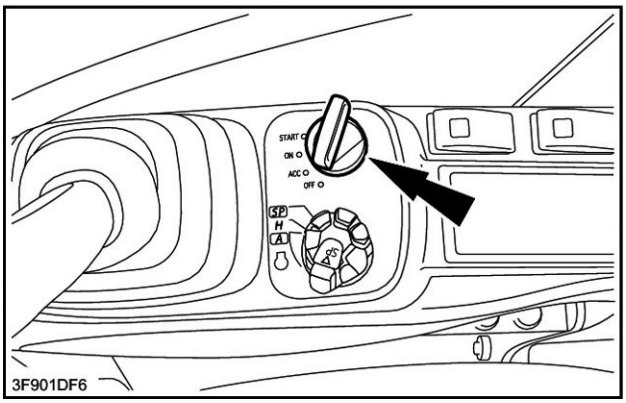

3F901DF6 1

3. Lower the function cancellation lever.

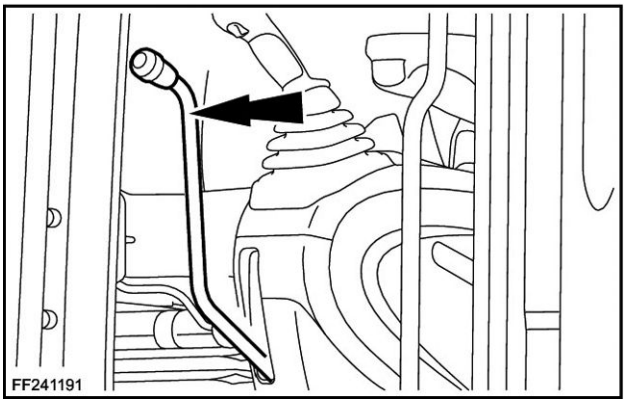

FF241191 2

4. Operate the control levers from right to left and front to rear a dozen times approximately.
5. Turn the ignition key to the **"Off"** position (shut down).

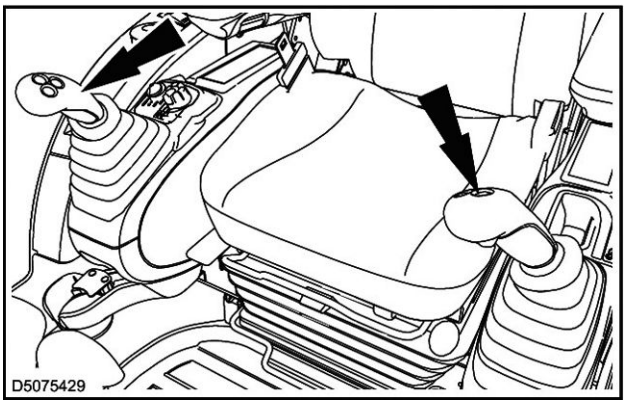

D5075429 3

6. Press the button on top of the breather on the hydraulic reservoir to release any residual pressure.

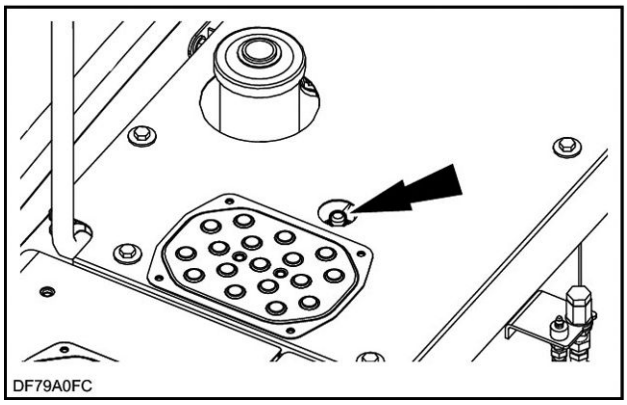

DF79A0FC 4

Hydraulic circuit

⚠ WARNING

Burn hazard!
Before performing any service on the hydraulic system, you must allow it to cool. Hydraulic fluid temperature should not exceed 40 °C (104 °F).
Failure to comply could result in death or serious injury.

W0241A

⚠ WARNING

Escaping fluid!
Hydraulic fluid or diesel fuel leaking under pressure can penetrate the skin and cause infection or other injury. To prevent personal injury: Relieve all pressure before disconnecting fluid lines or performing work on the hydraulic system. Before applying pressure, make sure all connections are tight and all components are in good condition. Never use your hand to check for suspected leaks under pressure. Use a piece of cardboard or wood for this purpose. If injured by leaking fluid, see your doctor immediately.
Failure to comply could result in death or serious injury.

W0178A

⚠ WARNING

Pressurized system!
Never attempt to drain fluids or remove filters when the engine is running. Turn off the engine and relieve all pressure from pressurized systems before servicing the machine.
Failure to comply could result in death or serious injury.

W0905A

Service specifications

Check the hydraulic reservoir fluid level: Every 10 hours or each day
Check the lines: Every 50 hours
Draining water and sediment from the hydraulic reservoir: Every 250 hours
Check the condition of the hydraulic fluid: Every 1000 hours
Replace the reservoir breather filter element: Every 1000 hours
Clean the inlet screen: Every 2000 hours
Replace the return filter: Every 2000 hours (after the first 250 hours during the run-in period)
Replace the pilot filter: Every 2000 hours (after the first 250 hours during the run-in period)
Replace the main pump outlet hoses: Every 2 years or every 4000 hours (whichever comes first)
Replace the attachment cylinder hoses: Every 2 years or every 4000 hours (whichever comes first)
Replace the suction filter: Every 5000 hours
Replace the hydraulic fluid: Every 5000 hours
Reservoir capacity: **75 l** (**19.8 US gal**)
Total system capacity: **158 l** (**41.7 US gal**)
Type of oil: (refer to page **6-5**)

ATTENTION: *If biodegradable fluid is used, it is essential to reduce the following servicing intervals to the number of hours shown:*

Replace the return filter: Every 1000 hours (after the first 50 hours during the run-in period)
Replace the hydraulic fluid: Every 2000 hours

ATTENTION: *If the machine is new or if a major component has been overhauled or changed in the hydraulic system, change the pilot filter and return filter after 50 hours of operation. After that, change these filters at the stipulated interval.*

ATTENTION: *Every 1000 operating hours, it is necessary to have the hydraulic fluid analyzed Consult your CASE CONSTRUCTION Dealer.*

ATTENTION: *After changing the hydraulic fluid, it is necessary to bleed all air from the hydraulic components. See "Bleeding air from the hydraulic components".*

NOTICE: *If metal particles are found in the old filters, consult your CASE CONSTRUCTION Dealer.*

Level in the reservoir

1. Place the machine on flat, level ground and place the attachment in the position shown. Raise the dozer blade (if equipped). Stop the engine and remove the ignition key.

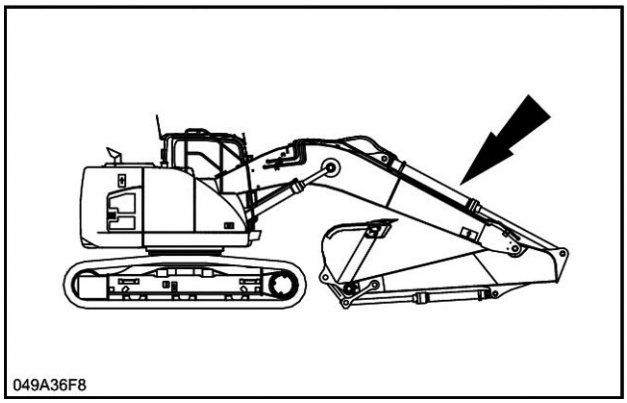

049A36F8 1

2. The oil should be in the middle of the indicator. Add more oil if necessary. See "Filling the reservoir".

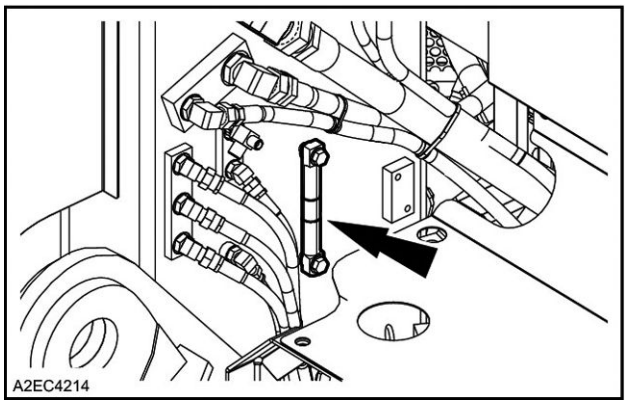

A2EC4214 2

Filling the reservoir

1. Release all pressure in the hydraulic reservoir. Refer to page **6-37**.
2. Clean the cover plate and the area around the plate. Remove the cover plate and add hydraulic fluid to the reservoir as required.
3. Replace the cover plate seal if required and install the cover plate.

NOTICE: *Make sure that no contaminant (water, sand etc.) enters the reservoir during filling.*

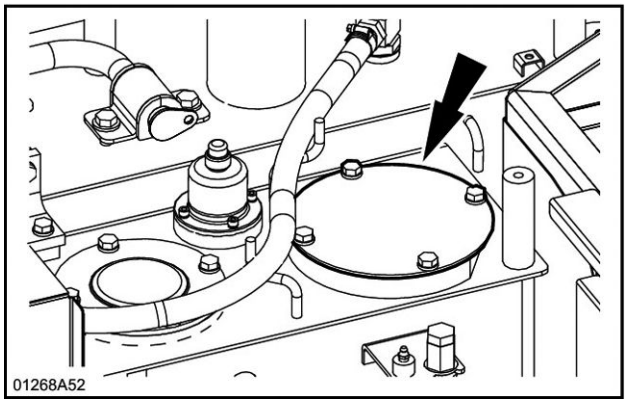

01268A52 3

Draining the reservoir sediment

1. Release all pressure in the hydraulic reservoir. Refer to page **6-37**.
2. Place a receptacle of a suitable capacity under the drain plugs.
3. Remove the drain plug from the reservoir and drain the sediment and water accumulated at the bottom of the reservoir.
4. After draining, install the drain plug.
5. Add hydraulic oil if necessary. See "Filling the reservoir".

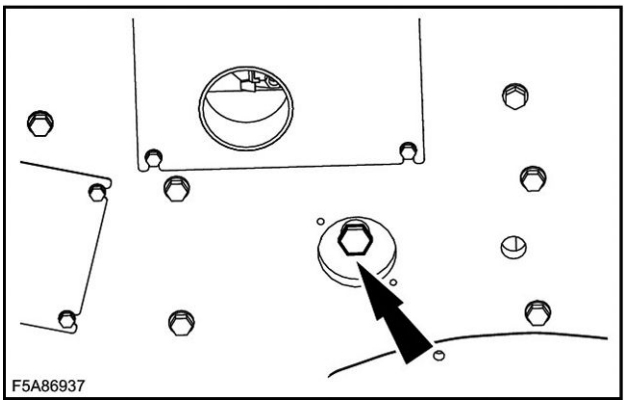

F5A86937 4

Replacing the pilot filter

1. Release all pressure in the hydraulic system. Refer to page **6-37**.
2. Unscrew and remove the filter using a wrench.
3. Coat the seal of the new filter with a fine film of clean oil.
4. Install the new filter. Turn the filter until the seal comes into contact with the filter head then tighten by an extra third of a turn by hand.

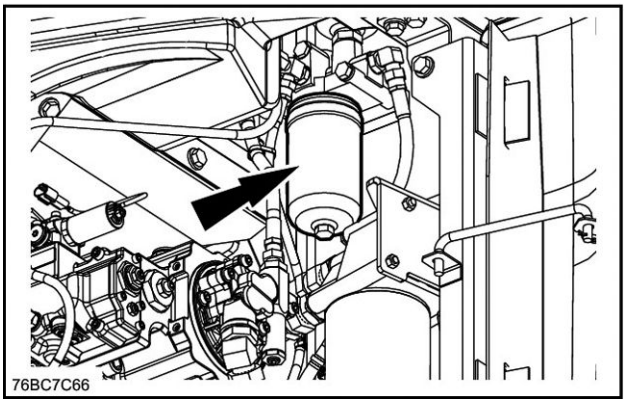

76BC7C66 5

Cleaning and replacement of the suction filter

1. Release all pressure in the hydraulic reservoir. Refer to page **6-37**.
2. Clean the top of the hydraulic reservoir and clean the suction filter cover.

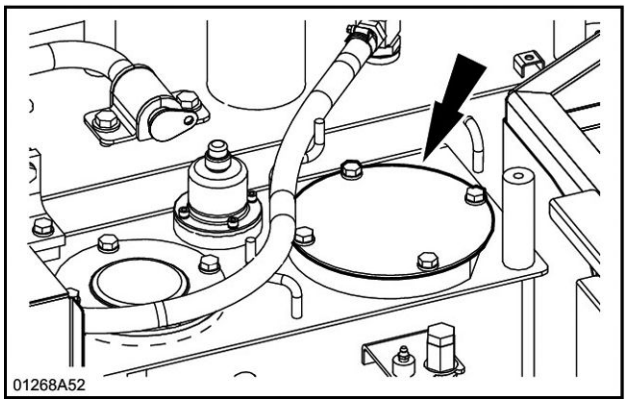

01268A52 6

3. Remove the cover **(1)** and O-ring **(2)** on the top of the suction filter rod assembly.
4. Remove the filter **(3)** and clean with solvent. Dry it completely and check it for any damage. If there is any damage on the surface, replace it with a new one.
5. Install a new O-ring **(2)**, install the filter **(3)** and rod assembly.
6. Install the cover **(1)**.
7. Check the level of the hydraulic fluid and add more if necessary. See "Filling the reservoir".

ATTENTION: *Install a new inlet screen every 5000 hours of operation or when the hydraulic fluid is changed.*

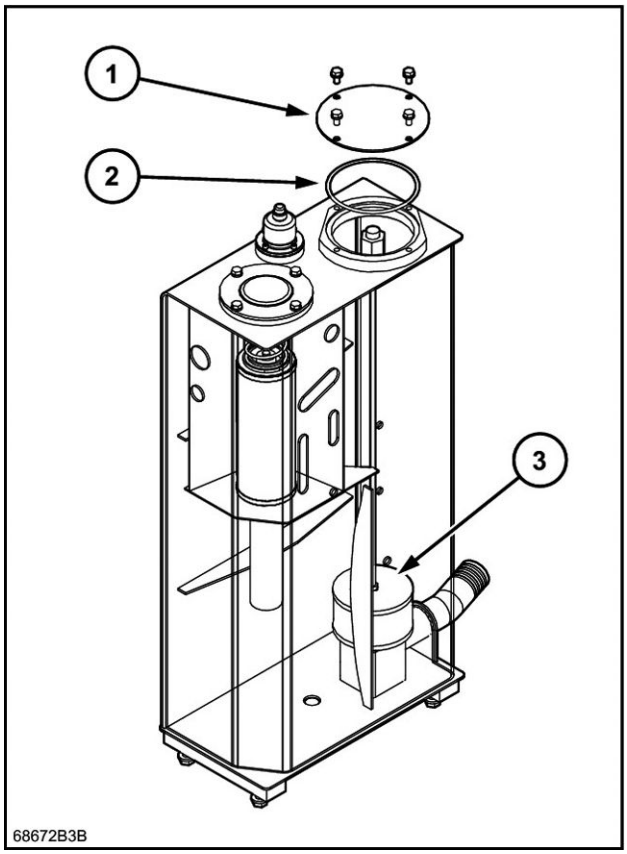

68672B3B 7

Replacing the return filter

1. Release all pressure in the hydraulic reservoir. Refer to page **6-37**.
2. Clean the top of the hydraulic reservoir and clean the return filter cover.

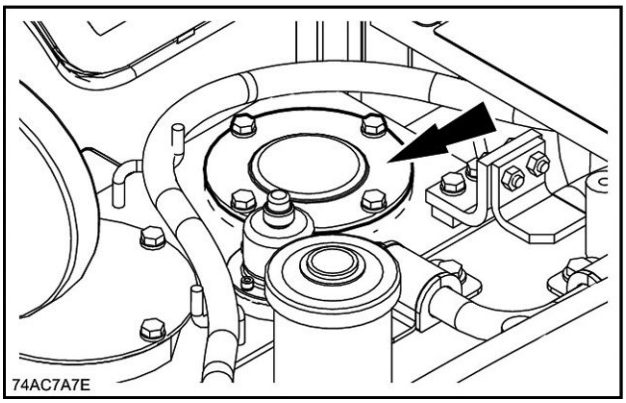

74AC7A7E 8

3. Remove the cover **(1)**, O-ring **(2)** and compression spring **(3)**.
4. Take out the filter **(4)**.
5. Install a new filter **(4)**.
6. Check O-ring **(2)** and change it if worn or damaged.
7. Install the compression spring **(3)** and the cover **(1)**.
8. Check the level of the hydraulic fluid and add more if necessary. See "Filling the reservoir".

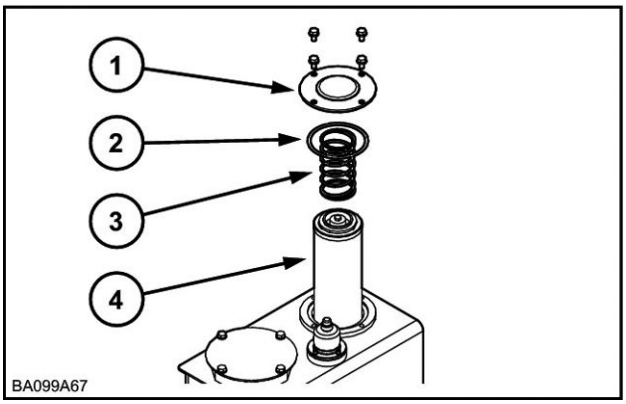

BA099A67 9

Replacing the reservoir breather filter element

1. Press the button **(1)** to release all pressure in the hydraulic reservoir.

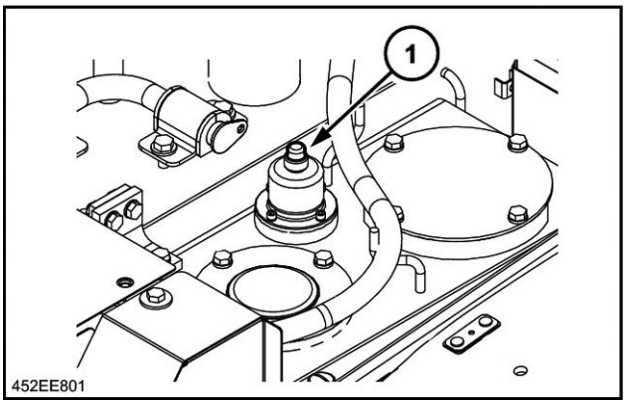

452EE801 10

2. Remove the nut **(2)** and the cover **(3)** from the breather.
3. Remove and discard the used filter element **(4)**.
4. Install a new element **(4)**, making sure the seal **(5)** is facing upwards.
5. Install the cover **(3)** as well as the nut **(2)**.

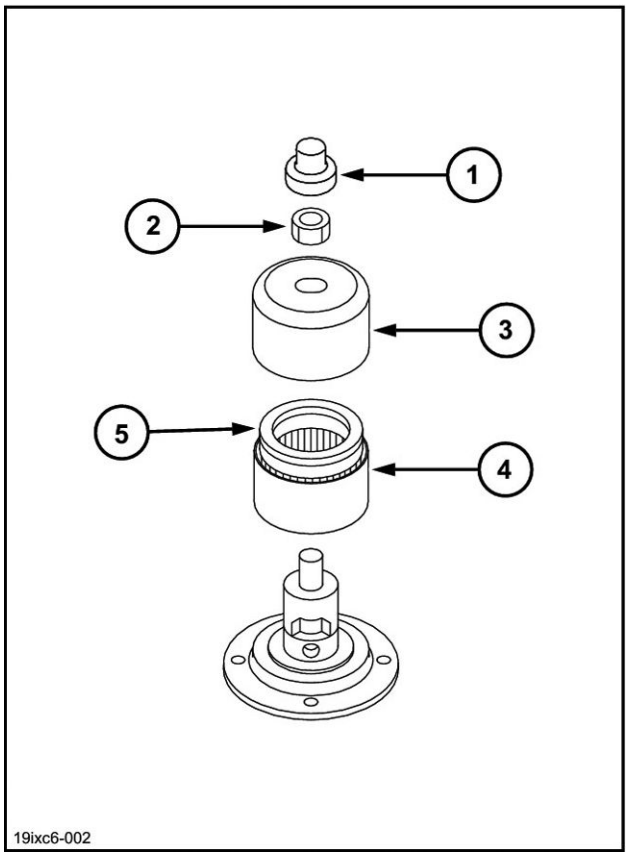

19IXC6-002 11

Replacing the hydraulic fluid

1. Release all pressure in the hydraulic reservoir. Refer to page **6-37**.
2. Remove the reservoir cover plate.
3. Using a pump, remove the fluid from the hydraulic reservoir. Have a container with a suitable capacity ready.

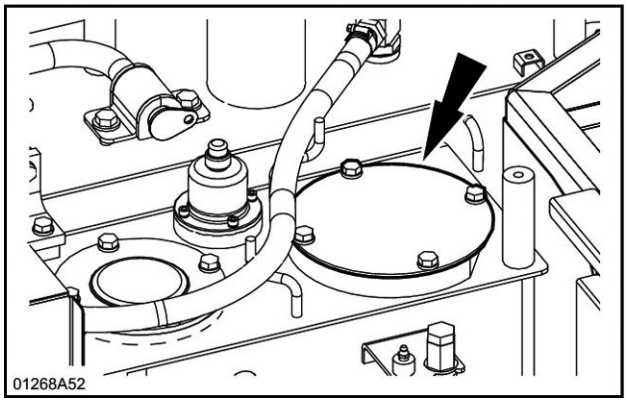

01268A52 12

4. Place a receptacle of a suitable capacity under the reservoir drain plug, remove the reservoir drain plug and allow the remainder of the fluid to flow out.
5. Change the suction filter and the return filter. See "Cleaning and replacement of the suction filter" and "Replacing the return filter".
6. Install the reservoir drain plug.
7. Fill the reservoir with new hydraulic fluid. See "Filling the reservoir".
8. Replace the cover plate seal if required and install the cover plate on the reservoir.

ATTENTION: *Before you start the engine, it is very important that you bleed air from all the hydraulic components. See "Bleeding air from the hydraulic components".*

9. Start and run the engine with no load for approximately five minutes.
10. Move each control several times to remove any air in the system.
11. Swing the upperstructure evenly left to right two complete turns or more.
12. Place the machine in position and then stop the engine.
13. Check the oil level in the hydraulic reservoir and add oil as required and check that there are no air bubbles in the hydraulic reservoir.

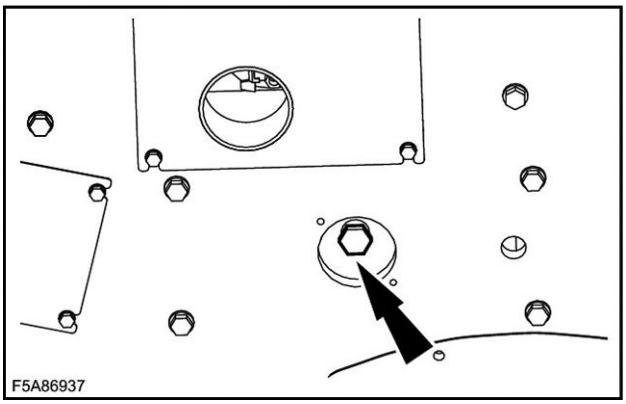

F5A86937 13

Bleeding air from the hydraulic components

NOTE: *After bleeding air from the components, stop the engine for five minutes and check there are no bubbles at the surface of the hydraulic fluid in the reservoir.*

Hydraulic pump

- Using a solvent, clean the periphery of the air bleed plug. Loosen the air bleed plug, remove the plug if the fluid does not flow.
- Fill the pump with new clean hydraulic fluid. Install and tighten the air bleed plug.
- Start the engine and run it at low idle speed. Loosen the air bleed plug on the pump. Tighten the plug when air free fluid comes out of the bleed plug hole. Clean the area completely.

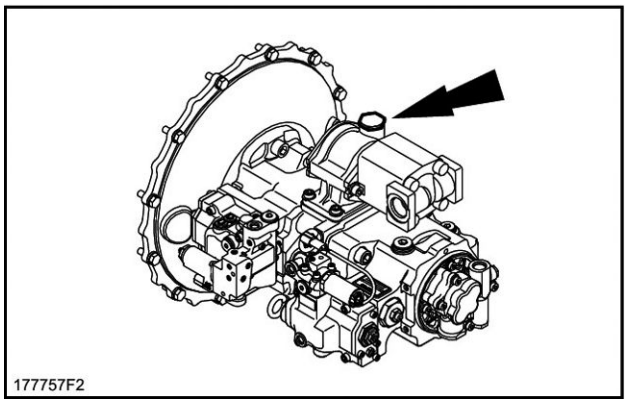

177757F2 14

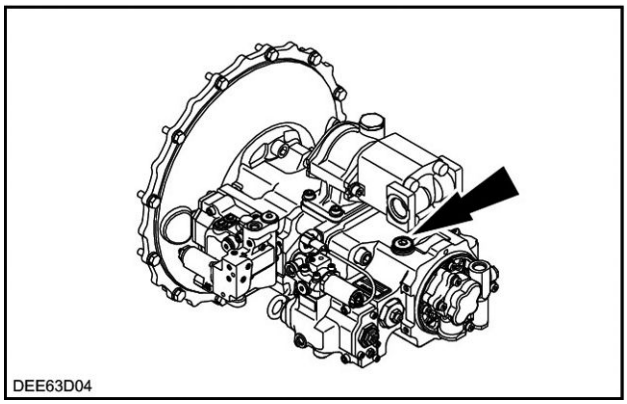

DEE63D04 15

Swing motor

- Start the engine and run it at low idle speed. Loosen the drain port and make sure hydraulic fluid runs out. If necessary, stop the engine and add oil via the orifice. Install the plug without tightening, then start the engine and run it at low idle speed, leaving it to run until oil begins to run from the orifice. Tighten the air bleed plug completely. Swing the upperstructure at least twice completely to the right and twice completely to the left.
- After complete bleeding, stop the engine for five minutes then check that there are no air bubbles in the hydraulic reservoir.

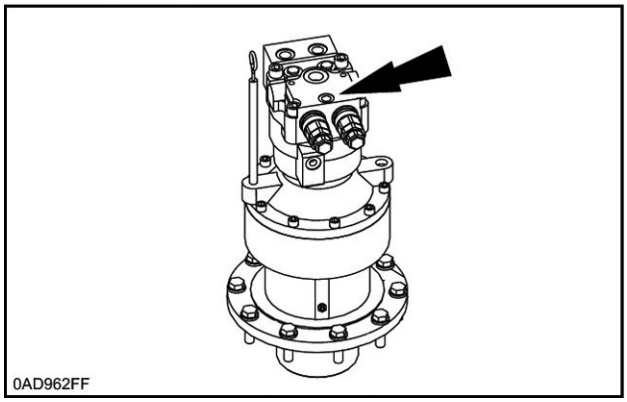

0AD962FF 16

Attachment cylinders

- Start the engine and run it at low idle speed. Extend and retract the attachment cylinder rods four or five times without bringing them to end of stroke. Then repeat the operation three or four times, this time bringing the cylinder rods to end of stroke.

Replacing the hydraulic filters and fluid when a hydraulic breaker is used (optional)

When using the hydraulic breaker, hydraulic fluid deteriorates more quickly than during ordinary digging. Check the hydraulic fluid level more frequently. In addition, when changing the filters, also check the condition of the hydraulic fluid.

Using the following graph as a reference, determine the intervals for changing the hydraulic fluid and filters, depending on the frequency of use of the hydraulic breaker.

Percentage of use	100%			40%			20%			10%		
Interval in hours	10	100	600	10	300	1500	10	600	300	10	800	4000
	Service points											
Hydraulic fluid	**(1)**		**(3)**	**(1)**		**(3)**	**(1)**		**(3)**	**(1)**		**(3)**
Return circuit filter		**(3)**			**(3)**			**(3)**			**(3)**	
Inlet filter		**(2)**	**(3)**		**(2)**	**(3)**		**(2)**	**(3)**		**(2)**	**(3)**
Pilot filter		**(3)**			**(3)**			**(3)**			**(3)**	
Hydraulic fluid condition	200H			300H			600H			800H		

(1) Check the level
(2) Clean or replace
(3) Replace

Checking the hydraulic system piping

Make sure there are no leaks from the hydraulic system hoses, pipes, plugs, connections and fittings and check that all nuts and screws are correctly tightened. In the event of problems, repair, change or tighten the component(s) concerned.

Air filter

Inspection

Be sure to carry out regular checks on the air filter, intake manifold, seals and hoses. At the same time, check the intake manifold screws and hose clamps for tightness.

The hoses should be changed before they are worn.

Service specifications

Inspect and clean the primary element: Every 250 hours or when the "Air filter" message is displayed on the message display screen
Replace the primary element: Every 1000 hours or after cleaning 6 times
Replace the secondary element: Every 1000 hours or after cleaning the main element 3 times

ATTENTION: *The primary element can be cleaned. The secondary element cannot be cleaned and must be changed.*

NOTICE: *Observe the air filter service intervals shown above. Clean filters mean longer engine life.*

Removing the elements

1. Release the fasteners and remove the cover.

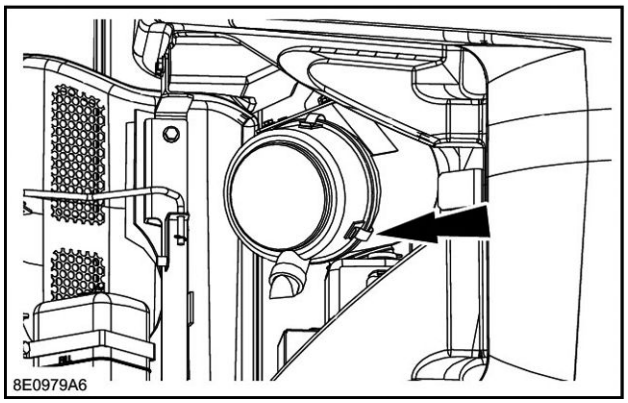

8E0979A6 1

2. Remove the primary element.

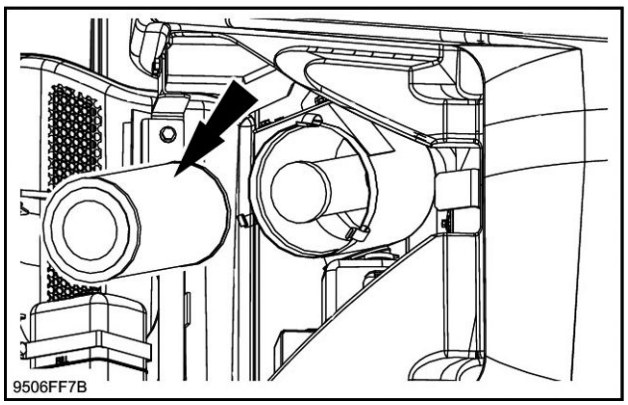

9506FF7B 2

3. Remove the secondary element if it needs changing.

ATTENTION: *The secondary element must be changed, not cleaned.*

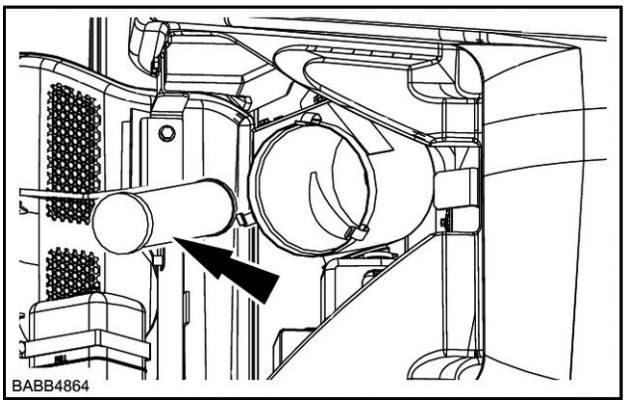

BABB4864 3

Cleaning the primary element

⚠ WARNING

Flying debris!
Compressed air can propel dirt, rust, etc. into the air. Wear eye and face protection when using compressed air.
Failure to comply could result in death or serious injury.

W0307A

If the primary element is dry:

Blow compressed air from the inside towards the outside at very low pressure. The compressed air nozzle should be held at least 3 cm from the inside wall of the element. Cleaning is completed once no more dust comes out of the primary element.

ATTENTION: *Compressed air pressure should not exceed 7 bar.*

ATTENTION: *Do not use compressed air if there is oil or soot in the element.*

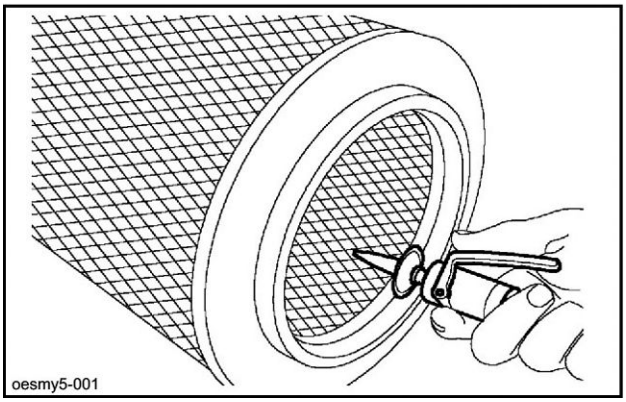

OESMY5-001 4

If the cartridge is greasy:

Clean it in water with a suitable detergent (consult your CASE CONSTRUCTION Dealer). Instructions for using the detergent are printed on the packaging.

NOTE: *Allow the element to dry completely before installing it. It is advisable to keep a spare, clean element ready for installation on the air filter while the cleaned element is drying.*

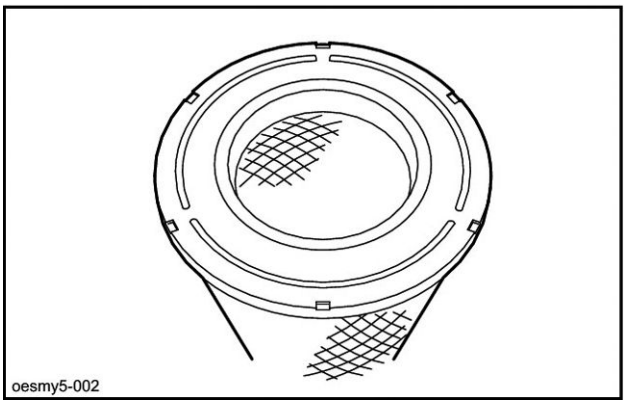

OESMY5-002 5

Inspecting the element

Check the element for damage by placing an inspection lamp inside the element.

ATTENTION: *Change the element if light can be seen through a hole, however small.*

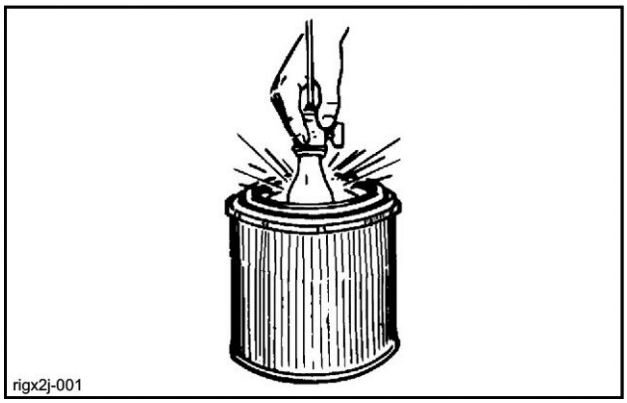

RIGX2J-001 6

Installing the elements

1. Install the secondary element.

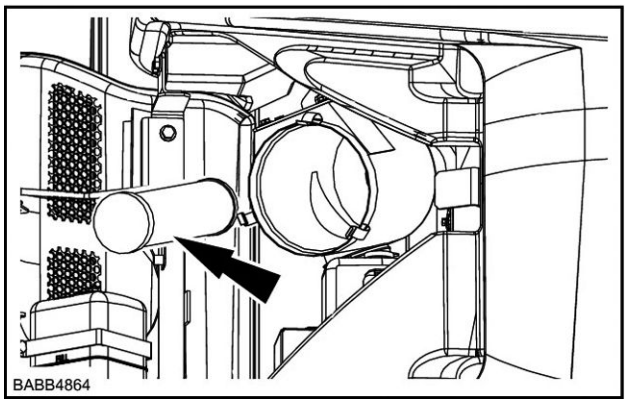

BABB4864 7

2. Install the primary element.

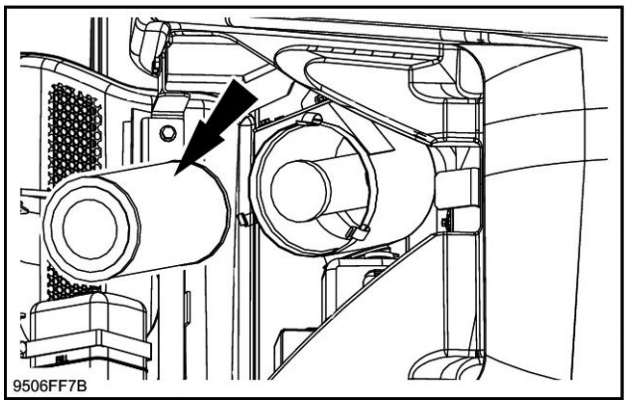

9506FF7B 8

3. Install the cover (with the word **"Top"** at the top) and close the fasteners.
4. Check that the dust ejector **(1)** under the filter is working correctly.

ATTENTION: *If exhaust smoke is abnormal after cleaning, the air filter primary element must be changed.*

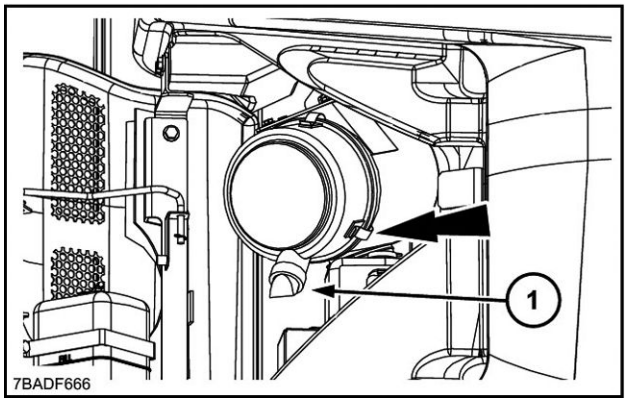

7BADF666 9

Swing reduction gear

⚠ WARNING

Hot surface possible!
Wait for all components to cool before performing any operation.
Failure to comply could result in death or serious injury.

W0251A

Service specifications

Oil level check: Every 250 hours
Oil drain: Every 1000 hours (after the first 250 hours during the run-in period)
Oil capacity: **3 l** (**0.8 US gal**)
Greasing: Every 2000 hours
Grease capacity: **0.5 kg** (**1.1 lb**)
Type of oil and grease: (Refer to page **6-5**)

Level

1. Park the machine on flat, horizontal ground. Stop the engine and remove the ignition key.
2. Remove the dipstick **(2)**. The oil should come up to the hatched area. If necessary, add more oil through the filler hole **(1)**.
3. Install the dipstick.

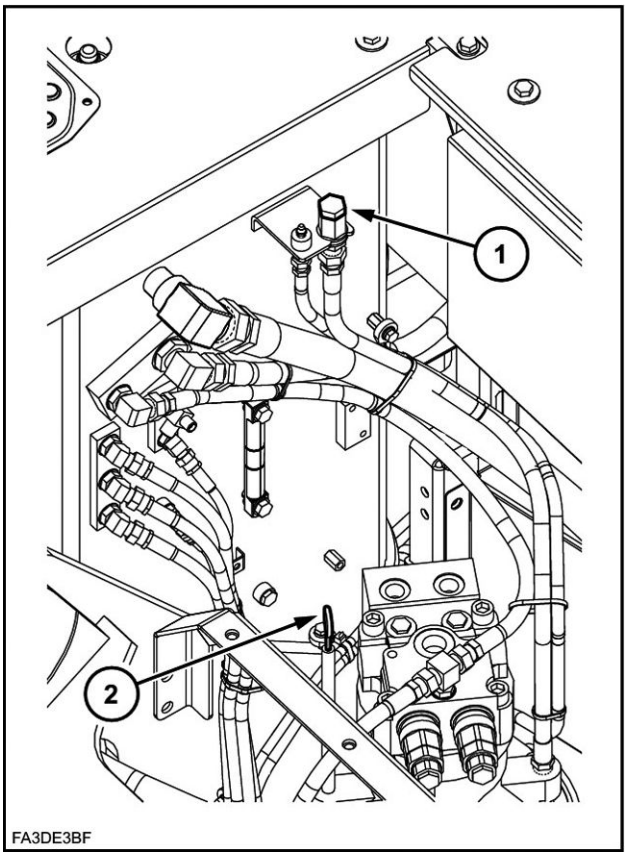

FA3DE3BF 1

Draining and refilling

1. Park the machine on flat, horizontal ground. Stop the engine and remove the ignition key.
2. Remove the dipstick **(2)** and the filler plug **(1)**.

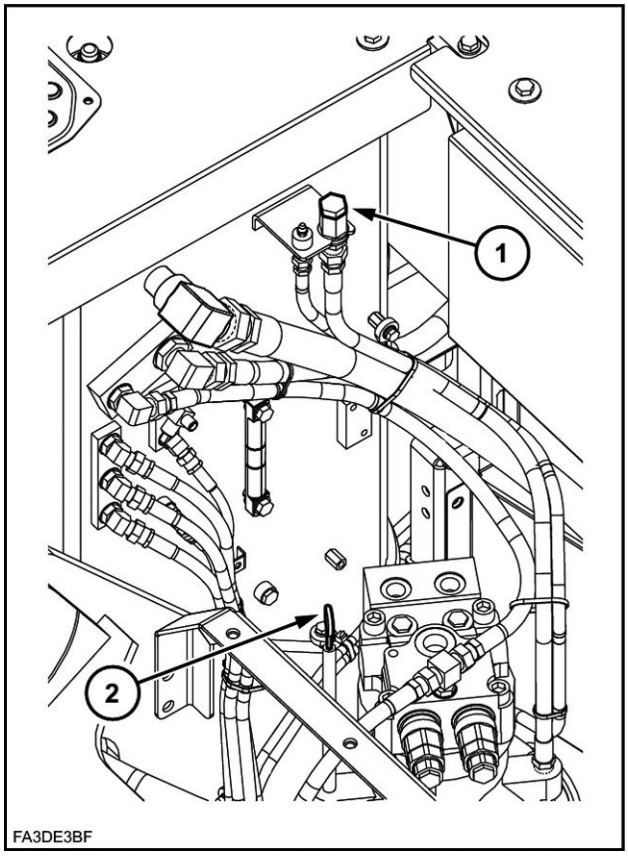

FA3DE3BF 2

3. Place a receptacle of a suitable capacity under the upperstructure frame, remove the oil drain plug **(3)** and allow the oil to flow out.

   NOTE: *The oil takes a relatively long time to drain.*

   ATTENTION: *Check the condition of the drained oil. If it contains metal filings or foreign matter, consult your CASE CONSTRUCTION Dealer.*
4. Install the drain plug **(3)**.

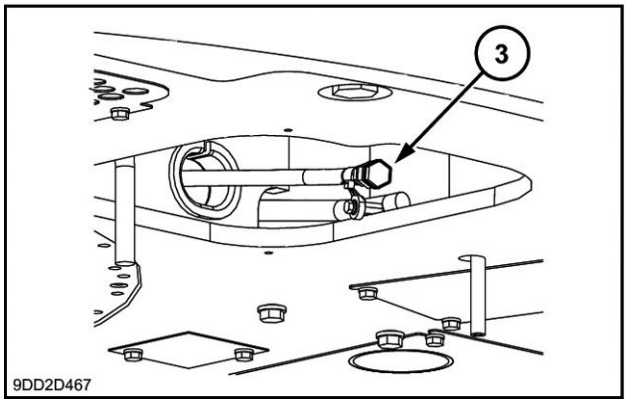

9DD2D467 3

5. Add oil through the filler hole **(1)** until the level is correct.
6. Install the dipstick **(2)** and the filler plug **(1)**.
7. Wait ten minutes and then use the dipstick **(2)** to check the oil level again. If necessary, add more oil through the filler hole **(1)**.

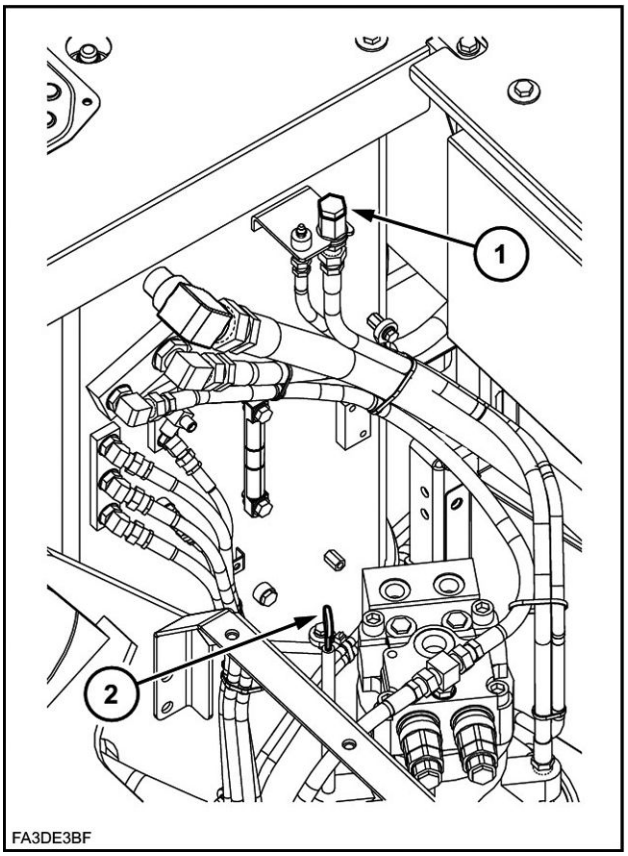

FA3DE3BF 4

Greasing

1. Remove the air bleed plug **(1)** and refill with grease through the grease point **(2)**.
2. A certain amount of grease should run out from the air bleed plug **(1)**.
3. Install the air bleed plug **(1)**.

NOTICE: *When greasing, the inner seal will be damaged if the air bleed plug **(1)** is not remove.*

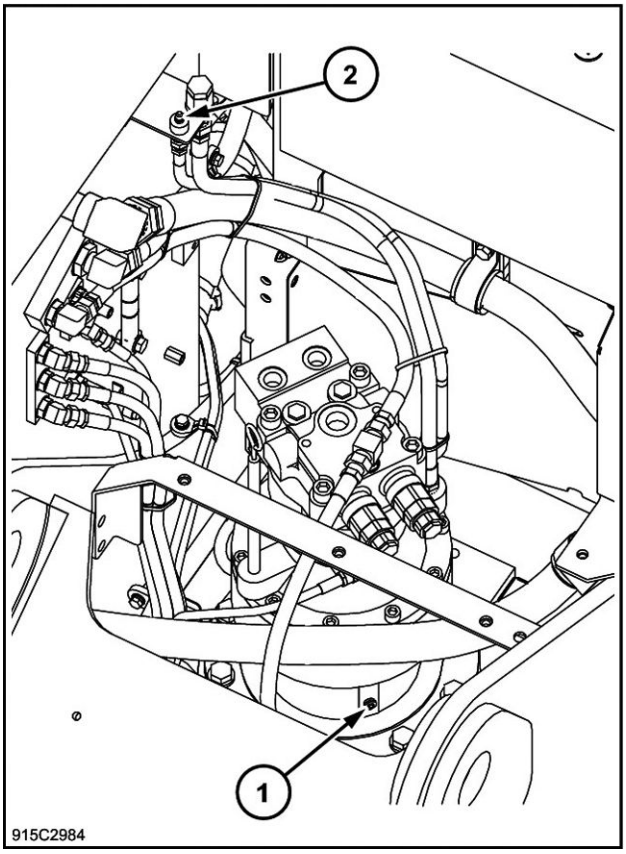

915C2984 5

Travel reduction gears

Service specifications

Oil level check: Every 250 hours
Oil drain: Every 1000 hours (after the first 250 hours during the run-in period)
Oil capacity (per reduction gear): **2.1 l** (**0.6 US gal**)
Type of oil: (Refer to page **6-5**)

Level

1. Park the machine on flat, horizontal ground.
2. Move the machine so that plug **(1)** is in the lowest possible position.
3. Stop the engine and remove the ignition key.
4. Slowly loosen the plug **(3)** to release any residual pressure.
5. Remove the plug **(2)** and check the oil level. The level must come up to the bottom edge of the port **(2)**. If required, remove the plug **(3)** and top up through this port until oil comes up to the bottom edge of the port **(2)**.
6. If necessary, replace the seals of plugs **(2)** and **(3)** then replace the plugs.
7. Repeat Steps 2 to 6 for the other travel reduction gear.
8. Travel slowly with the machine and make sure there are no leaks.

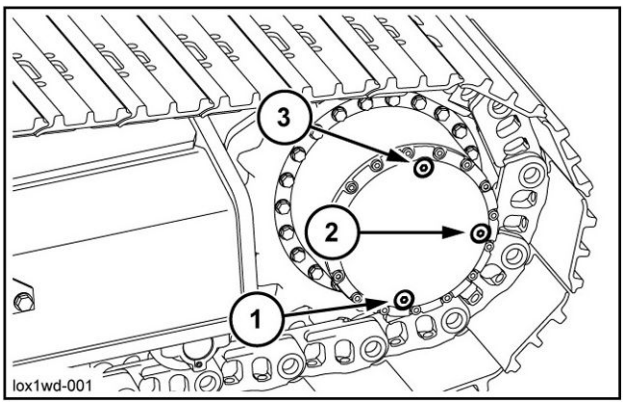

LOX1WD-001 1

Draining and refilling

1. Park the machine on flat, horizontal ground.
2. Move the machine so that plug **(1)** is in the lowest possible position.
3. Shut down the engine and remove the ignition key.
4. Place a receptacle of suitable capacity under the travel reduction gear.
5. Slowly loosen the plug **(3)** to release any residual pressure then remove the three plugs.
6. Allow the oil to drain.

   ATTENTION: *Check the condition of the drained oil. If it contains metal filings or foreign matter, consult your CASE CONSTRUCTION Dealer.*
7. If required, replace the plug seals.
8. Install the plug **(1)**, fill with oil through the port **(3)** until oil comes up to the bottom edge of port **(2)**, then install the plugs **(2)** and **(3)**.
9. Repeat Steps 2 to 8 for the other travel reduction gear.
10. Travel slowly with the machine and make sure there are no leaks.

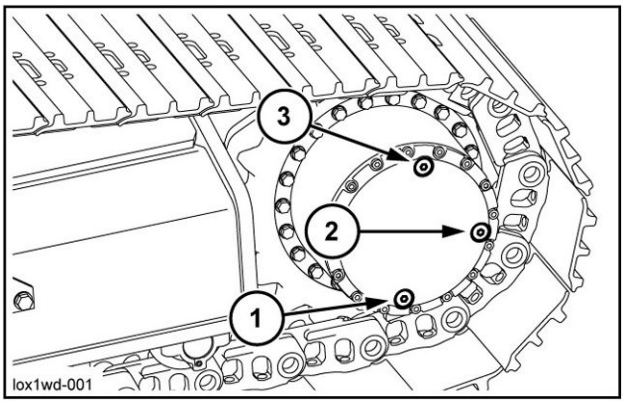

LOX1WD-001 2

Tracks

Service specifications

Clean: Periodically and when the machine has been working in mud
Check tension: Periodically
Check steel pad screw torques: Every 250 hours (after the first 50 hours during the run-in period)

ATTENTION: *If the tracks are too tight, they wear quickly. If tracks are not tight enough, they wear quickly and the links can catch on the sprocket wheel or slide off the idler wheel or the sprocket wheel. Clean the tracks after work.*

Cleaning

When the machine has been working in mud, a reduction in temperature can cause the mud to solidify.

1. Place the upperstructure at right angles to the undercarriage. Use the attachment to press on the ground and lower the boom until the track is raised off the ground. Then place a block beneath the undercarriage to relieve the attachment.

⚠ WARNING

Tip-over hazard!
Only raise the track as little as necessary.
Failure to comply could result in death or serious injury.

W0276A

NOTE: *(Standard machine only) The machine can be lifted by completely lowering the dozer blade and by using the attachment as a support on the ground, opposite the dozer blade.*

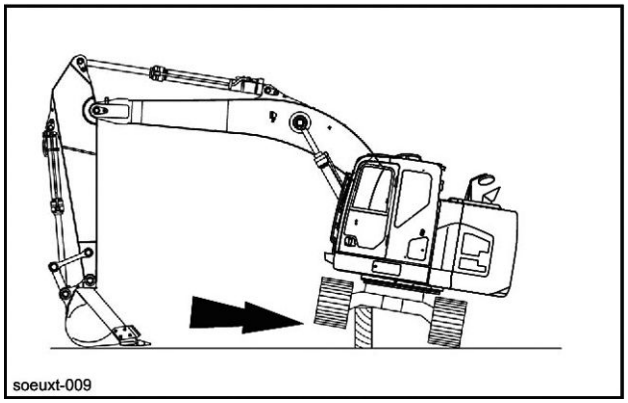

3CA47630 1

2. Turn the engine throttle button to maximum speed position.

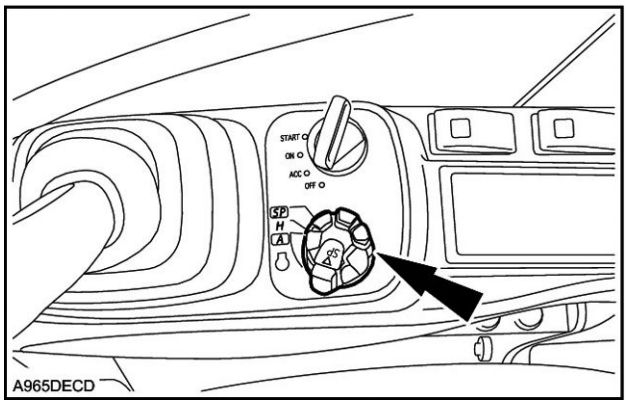

A965DECD 2

3. Use the travel speed selector to select high speed.

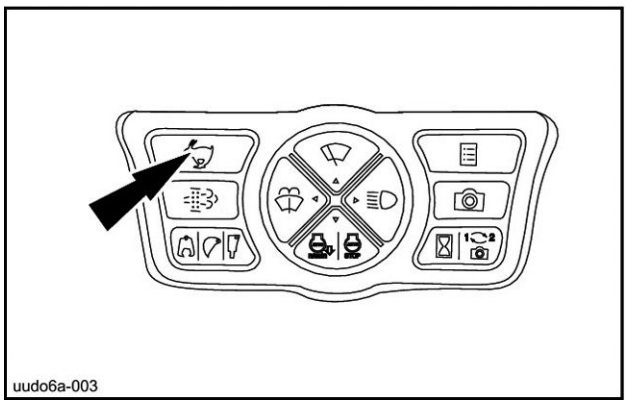

UUDO6A-003Z 3

4. Operate the travel control lever for the raised track forward and then in reverse, to remove the mud.
5. With the track raised, check the track tension.
6. Repeat Steps 1 to 5 for the other track.

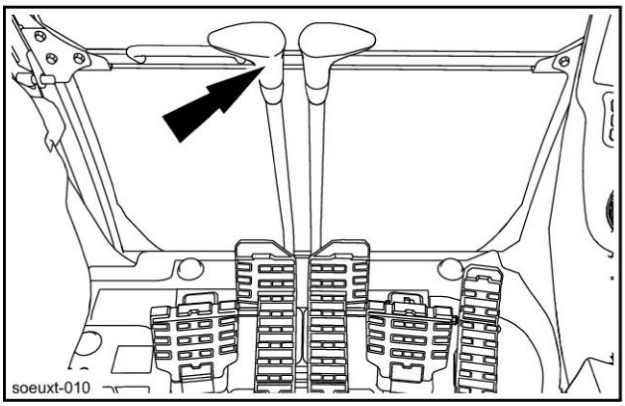

SOEUXT-010 4

Checking the tension

1. If the track is not yet raised, put the machine into the required position by proceeding in the same manner as for cleaning. See "Cleaning".
2. Use the travel control lever to operate the raised track in reverse for a few moments.
3. Stop the engine and remove the ignition key.
4. Measure the sag of the track at the center between the base of the undercarriage and the pad.
   The value must be between: **240 mm** (**9.4 in**) and **270 mm** (**10.6 in**).
5. Adjust the tension if necessary and then lower the raised track to the ground.
6. Repeat Steps 1 to 5 for the other track.

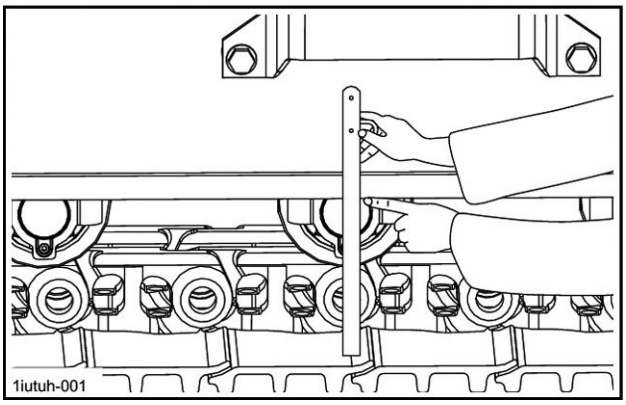

1IUTUH-001 5

Adjusting the tension

NOTE: *This operation is to be carried out after the tension has been checked.*

To increase tension

1. Clean the grease fitting adaptor and the grease fitting.
2. Connect the grease pump. Inject grease to obtain the right amount of track tension.
   The value must be between: **240 mm** (**9.4 in**) and **270 mm** (**10.6 in**).
3. Remove the grease pump and clean the grease fitting.
4. Repeat Steps 1 to 3 for the other track.

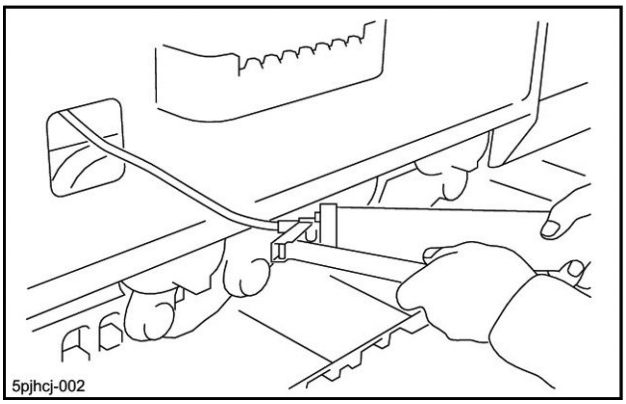

1V7EYE-002 6

To reduce tension

⚠ WARNING

Pressurized fluid can penetrate the skin and cause severe injuries.
The grease in the cylinder is under high pressure. Never loosen the grease fitting adaptor completely in order to speed up the flow of grease.
Failure to comply could result in death or serious injury.

W0261A

1. Loosen the grease fitting adaptor by about three turns to allow grease to flow out of the cylinder.
2. As soon as the right track tension is obtained, tighten the adaptor.
   The value must be between: **240 mm** (**9.4 in**) and **270 mm** (**10.6 in**).
3. Clean the grease adaptor and fitting and then lower the raised track to the ground.
4. Repeat Steps 1 to 3 for the other track.

NOTICE: *If the grease fitting adaptor is damaged, grease may leak out. Check the condition of the grease fitting adaptor regularly and replace it if necessary.*

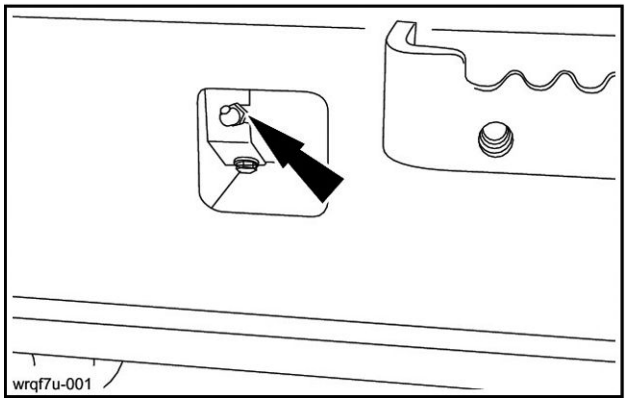

WRQF7U-001 7

Tightening torque of the track pad screws

ATTENTION: *Regularly check the tightening of the screws. Do not use the machine with the track pad screws loose, the screws may come off and damage the track.*

The tightening torque of the screws must be:
373 - 451 N·m (**275.1 - 332.6 lb ft**)

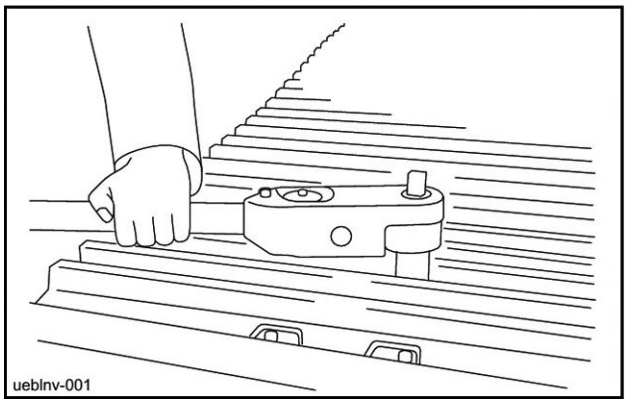

UEBLNV-001 8

NOTE: *Follow the prescribed order.*

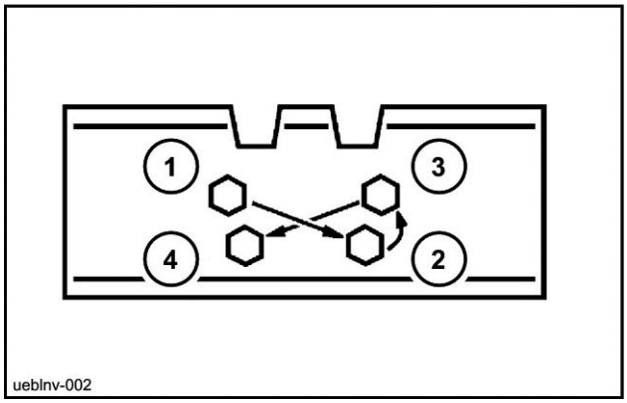

UEBLNV-002 9

Track rollers and idler wheels

Service specifications

Check: Every 250 hours

The upper and lower rollers and idler wheels use a permanent floating seal type sealing mechanism. The service life normally lasts until overhaul, but check visually from time to time before work for oil leakage. If oil leakage is found, component replacement is necessary. Consult your CASE CONSTRUCTION Dealer.

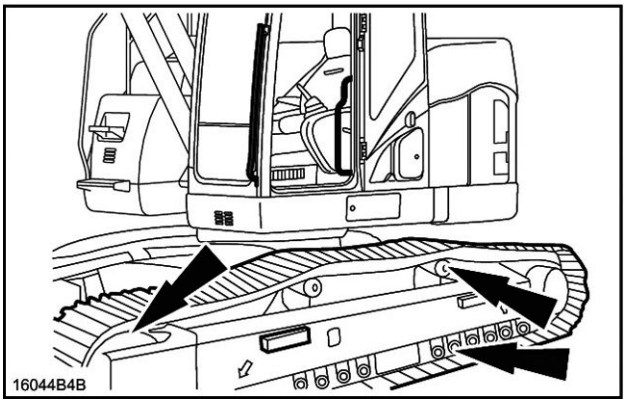

16044B4B 1

Radiator and coolers

Service specifications

Check for leakage: Every 10 hours or every day
Clean: Every 500 hours

Cleaning

1. Stop the engine and remove the ignition key.
2. Open the rear left-hand side door and block it with the supporting strut.

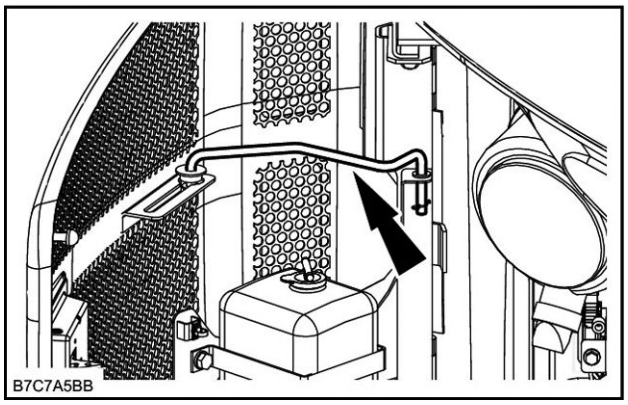

B7C7A5BB 1

3. Remove the one tach clip **(1)** and remove the protection grilles **(2)**.

⚠ WARNING

Flying debris!
Compressed air can propel dirt, rust, etc. into the air. Wear eye and face protection when using compressed air.
Failure to comply could result in death or serious injury.

W0307A

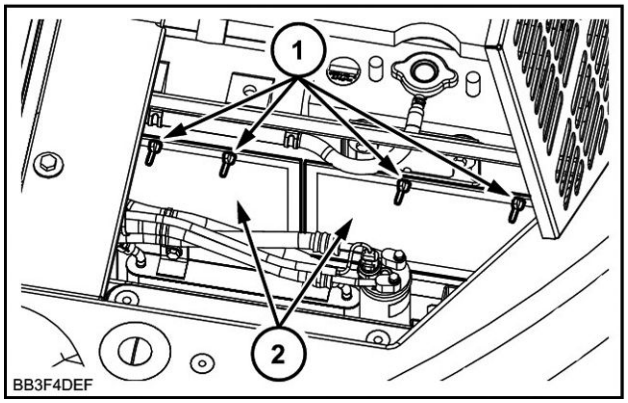

BB3F4DEF 2

4. Clean the radiators and the oil coolers:
   Dry dust: use compressed air.
   Mud: use a water jet.
   Greasy dust: use perchlorethylene.

   ATTENTION: *The use of trichlorethylene is strictly forbidden.*

5. Install the protective grilles **(2)** then install the one tach clip **(1)**.

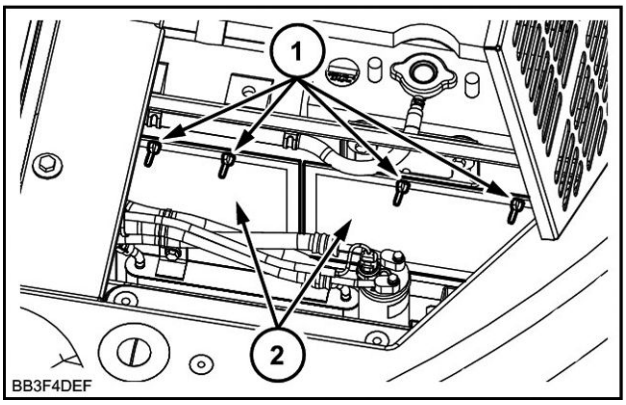

BB3F4DEF 3

⚠ WARNING

Moving parts!
Make sure all entry and mechanical access doors are properly closed before operating the machine.
Failure to comply could result in death or serious injury.

W0238A

⚠ WARNING

Moving parts!
Make sure the hood is closed properly before driving the machine.
Failure to comply could result in death or serious injury.

W0280A

Fan and alternator drive belt

Service specifications

Visual check: Every 10 hours or every day
Check belt tension: Every 250 hours

Checking the tension

NOTICE: *If the engine runs with the belt slack, the belt can slip in its housing and cause the engine to overheat or the battery to receive insufficient charge.*

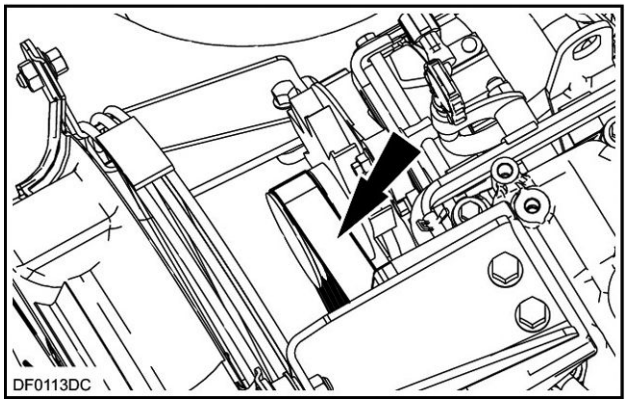

DF0113DC 1

With engine shut down and the ignition key removed, use your finger to exert a pressure of about **10 kg** (**22.0 lb**) at the centre of the belt.
The tension slack should be between about **6 mm** (**0.2 in**) and **8 mm** (**0.3 in**).

NOTE: *Check if there are any signs of wear damage to the pulleys or the belt. Check carefully to ensure that the belt is correctly positioned in the pulley grooves. If the belt is stretched, cracked or frayed, it must be replaced.*

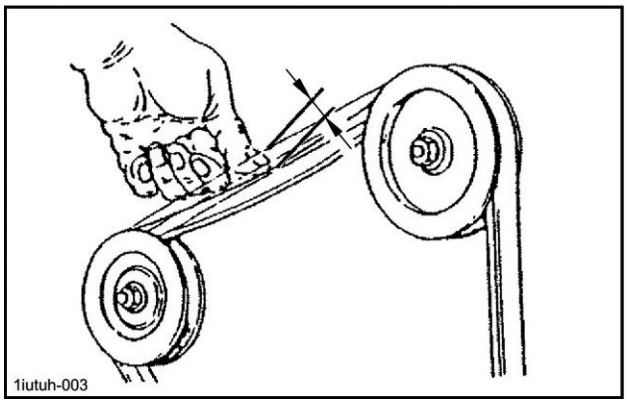

1IUTUH-003 2

Adjusting the tension

Remove the retaining screws **(1)** and **(2)**. Use the adjustment screws **(3)** to move the alternator outwards until belt tension is correct. Tighten the alternator mounting bolts **(1)** and **(2)**.

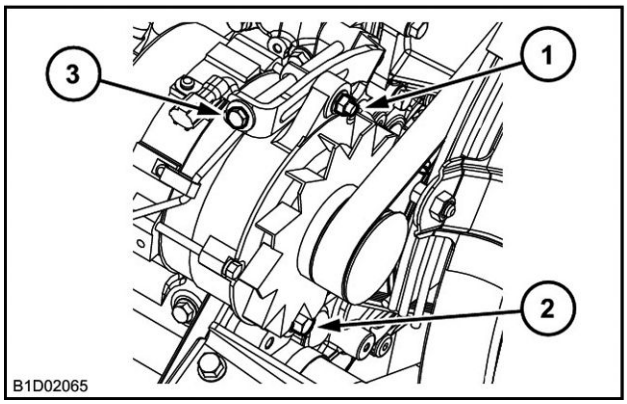

B1D02065 3

Replacing the belt

If the belt breaks, the message "Alternator" is displayed on the message screens. Shut down the engine, remove the ignition key and change the belt.

Remove the retaining screws **(1)** and **(2)**. Use the adjustment screw **(3)** to push the alternator inward.

Remove the worn belt.

Install a new belt.

Adjust the belt using the screw **(3)**.

Retighten the retaining screws **(1)** and **(2)**.

Run the engine for about an hour and then check the belt tension again.

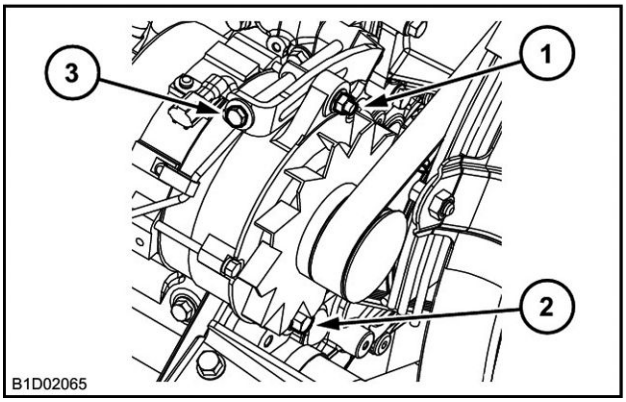

B1D02065 4

Adjustment of engine valve rocker clearances

Service specifications

Check: Every 1000 hours

NOTE: *Ask your CASE CONSTRUCTION Dealer to check this.*

Fuel tank filter

Service specifications

Clean filter: Periodically

Remove the filter and clean it in diesel oil.

NOTE: *Use suitable fuel to refill the fuel tank, (refer to page* ***6-5****).*

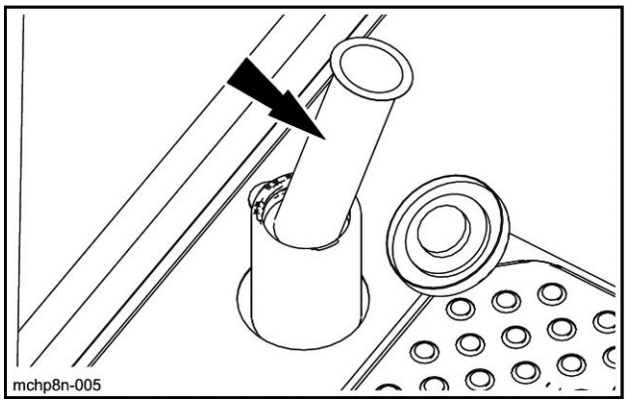

MCHP8N-005 1

Fire extinguisher (not supplied)

It is strongly recommended to have a fire extinguisher available and to keep it in the front boot.

Service specifications

Every month:

- Examine the fire extinguisher and make sure it is not damaged.

Every six months:

- Have an approved specialist empty and refill the powder in the fire extinguisher.

Every year:

- Have an approved specialist examine the fire extinguisher.

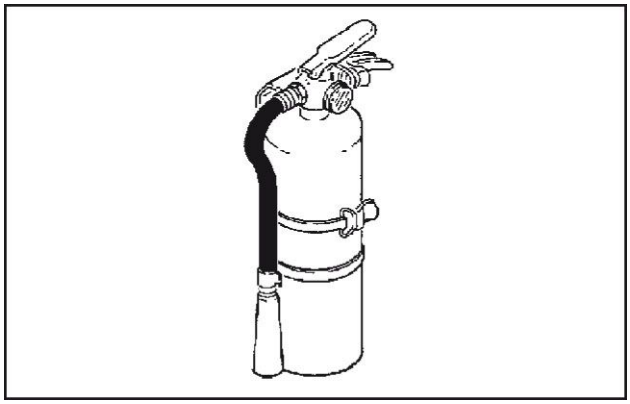

CS98M573TBP1 1

Protecting the Electrical/Electronic Systems During Charging or Welding

⚠ DANGER

Improper operation or service of this machine can result in an accident.
Any unauthorized modifications made to this machine can have serious consequences. Consult an authorized dealer on changes, additions, or modifications that may be required for this machine. Do not make any unauthorized modifications.
Failure to comply will result in death or serious injury.

D0030A

⚠ WARNING

Battery acid causes burns. Batteries contain sulfuric acid.
Avoid contact with skin, eyes or clothing. Antidote (external): Flush with water. Antidote (eyes): flush with water for 15 minutes and seek medical attention immediately. Antidote (internal): Drink large quantities of water or milk. Do not induce vomiting. Seek medical attention immediately.
Failure to comply could result in death or serious injury.

W0111A

Whenever carrying out a welding operation on the undercarriage or upperstructure carriage as authorized by the manufacturer and in accordance with his instructions, disconnect the batteries, disconnect the alternator B+ and D+ terminal wires and connect the welding apparatus earth cable to the component on which the welding operation is to be performed. Never connect the welding apparatus to the undercarriage when welding on the upperstructure (or vice-versa). Never connect the welding apparatus earth to a component of the hydraulic system.

To avoid damage to the electronic/electrical systems, always observe the following:

1. Never make or break any of the charging circuit connections, including the battery connections, when the engine is running.
2. Never short any of the charging components to ground.
3. Always place the key of the battery master switch in **"O"** (Off) position and disconnect the ground cable from the battery before arc welding on the machine (if equipped).

• Position the welder ground clamp as close to the welding area as possible.

• If welding in close proximity to a computer module, then the module should be removed from the machine.

• Never allow welding cables to lay on, near or across any electrical wiring or electronic component while welding is in progress.

4. Always disconnect the negative cable from the battery when charging the battery in the machine with a battery charger.

ATTENTION: *If welding must be performed on the unit, either the machine, the battery ground cable must be disconnected from the machine battery. The electronic monitoring system and charging system will be damaged if this is not done.*

Remove the battery ground cable. Reconnect the cable when welding is completed.

Cab protection (ROPS and FOPS) (optional)

Service specifications

Check: Every 250 hours (after the first 50 hours during the run-in period)

Maintenance and checks

Check the retaining hardware, if necessary retighten the screws.

Check the absence of cracks, rust or holes in the protective structure and the components that constitute it. Ageing, bad weather and accidents can cause damage. If you have even the slightest doubt regarding the condition of the structure, consult your CASE CONSTRUCTION Dealer.

If the protective structure has suffered any accident, it is necessary to replace the damaged components of the structure in order to restore the initial protection, consult your CASE CONSTRUCTION Dealer.

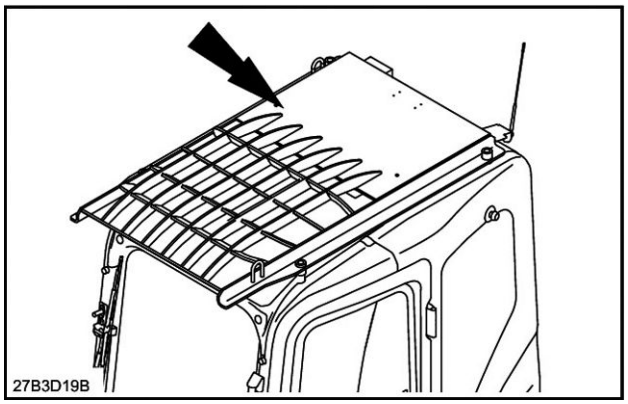

27B3D19B 1

Machine inspection and cleaning

Service inspections

Inspect and clean: Periodically

Or whenever oil or grease has been spilt on the machine.

Do not use compressed air if there is oil or soot in the element.

Take the opportunity during this operation to make a visual check of all the welded components (in case of appearance of cracks), the attachment linkages and check the teeth and tooth tips for correct retention and for wear. Look for any leaks and check the condition of all pipes and hoses.

Checking the machine settings

Service specifications

Have this checked by your CASE CONSTRUCTION Dealer: Every 6 months

Plastic and resin parts

When cleaning the plastic windows, the console, the instrument panel, the indicators, etc. do not use gasoline, kerosene, paint solvents, etc. Only use water, soap and a soft cloth.

The use of gasoline, kerosene, paint solvents, etc. will cause discoloration, cracks or deformation of these parts.

Checking the cylinders for leaks

A cylinder rod should be slightly oily. Check that there are no leaks after a period of work, when the whole hydraulic system is at normal operating temperature.

1. Wipe clean the rod and bearing on the cylinder to be cleaned.
2. Operate normally for five or ten minutes.
3. Extend the cylinder rod.
4. Carry out the leak test.

ROD APPEARANCE	TEST	CONCLUSION
Dry	Slight traces of oil when a piece of paper is wiped over **20 cm** (**7.9 in**) of the rod.	Normal
Slightly greasy	Paper remains stuck to rod when run over rod.	Normal
Oily	Paper remains stuck when placed on rod.	Normal
Very oily or weeping	Each time the cylinder rod is extended, a ring of oil can be seen on the rod.	Consult your CASE CONSTRUCTION Dealer
Leakage	Each time the rod retracts, the excess oil drips from the gland.	

Tooth tip wear limits on the backhoe bucket

The degree to which a tooth tip can be worn can be assessed visually.

It is possible to extend the life of a tooth tip which is wearing unevenly, in a non-symmetrical fashion.

NOTE: *Do not wait for tooth tips to be completely worn through before changing them.*

NOTICE: *Never try to work with a missing tooth tip or a tooth tip which is worn through. The adaptor could be seriously damaged.*

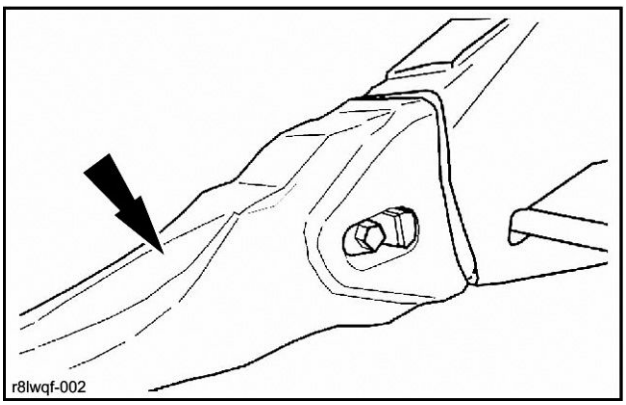

R8LWQF-002 1

Replacing a tooth on a backhoe bucket

Removal

1. Place the bucket a few centimetres above the ground. Stop the engine and remove the ignition key.
2. Turn the locking stud **90 °** in the clockwise direction using a hexagonal wrench.
3. Remove the locking pin then remove the worn tooth tip.

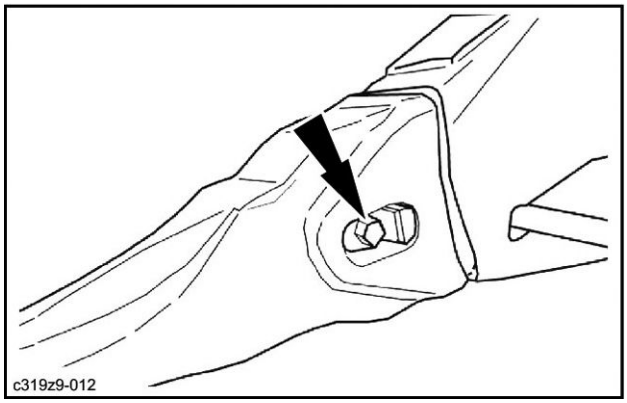

C319Z9-012 1

Installation

1. Clean the mating surface on the adaptor.
2. Engage a new tooth tip right up to the stop and hold it in position.
3. Engage the locking pin until it is flush with the tooth tip.

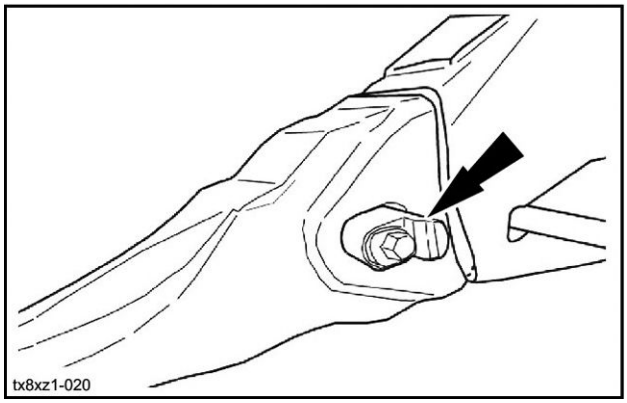

TX8XZ1-020 2

4. Turn the locking stud **90 °** in the anti-clockwise direction using a hexagonal wrench.

NOTE: *When replacing a tooth tip, it is advisable to replace the locking pin at the same time.*

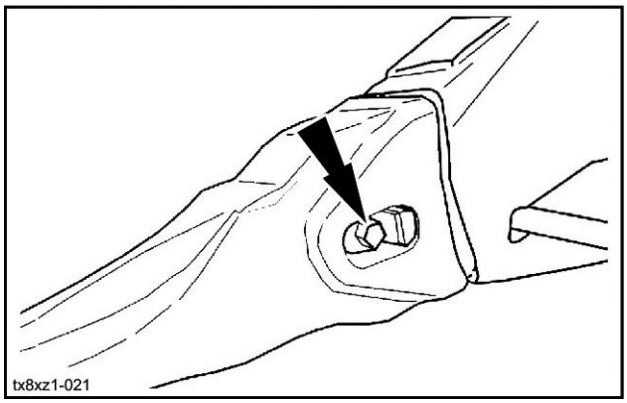

TX8XZ1-021 3

Replacing a backhoe bucket

Removal

1. Place the bucket flat on flat, horizontal ground.
2. Operate the attachment controls so that the arm/bucket linkage pin is not gripped by the weight of the arm.
3. Stop the engine and remove the ignition key.
4. Remove the pins hardware.

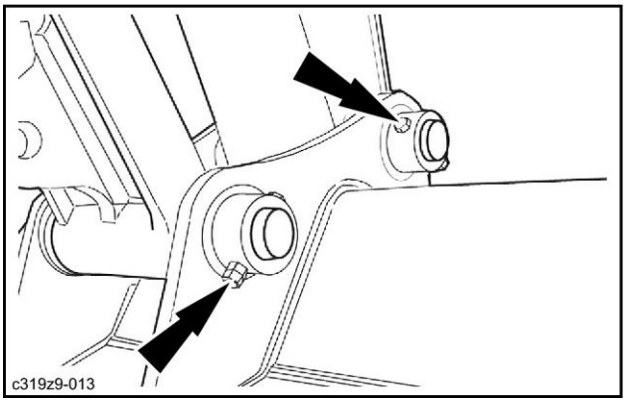

C319Z9-013 1

5. Remove the bucket pins.
6. Start the engine.
7. Disengage the attachment from the bucket and save the linkage seals for re-use.

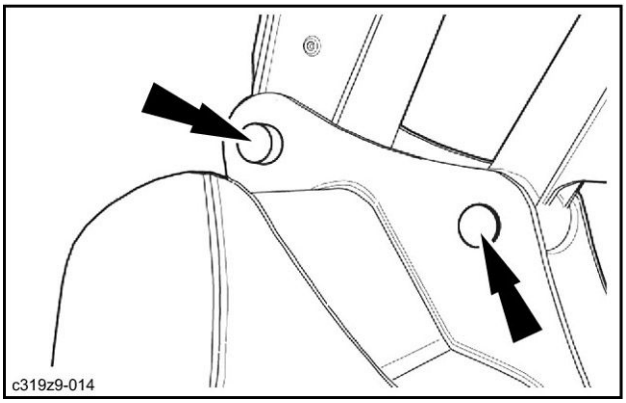

C319Z9-014 2

Installation

1. Make sure the bucket is in a stable position.
2. Start the engine.
3. Bring the arm into its housing.
4. Stop the engine and remove the ignition key.
5. Install the linkage seals between the arm and the bucket. Change them if necessary.

6. Install the arm/bucket linkage pin and its hardware.
7. Start the engine.
8. Bring the bucket rod into its housing.
9. Stop the engine and remove the ignition key.
10. Install the linkage seals between the rod and the bucket. Change them if necessary.
11. Install the rod/bucket linkage pin and its hardware.
12. Grease the linkage pins.

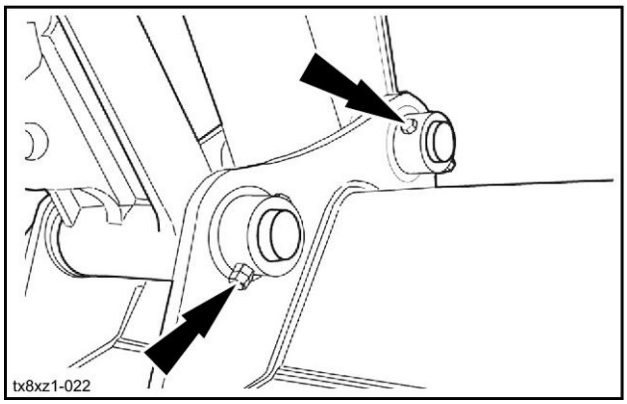

TX8XZ1-022 3

Checking the opening of the quick coupler locking hook (optional)

⚠ WARNING

Improper operation or service of this machine can result in an accident.
If you do not understand a maintenance procedure, or doubt your ability to perform a maintenance procedure correctly, see your authorized dealer.
Failure to comply could result in death or serious injury.

W0157A

Service specifications

Check: Weekly and each time the quick coupler is installed

ATTENTION: *It is imperative to carry out this check once a week and each time the quick coupler is installed.*

1. Place the switch **(1)** in unlocking position. The audible alarm device will sound. (Refer to page **3-56**).

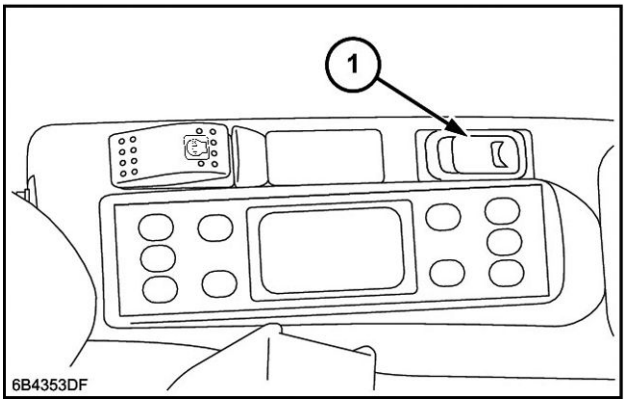

6B4353DF 1

2. Operate the bucket control to retract the cylinder rod completely and maintain the hydraulic pressure so the latching hook retracts and comes upagainst the locking bar.

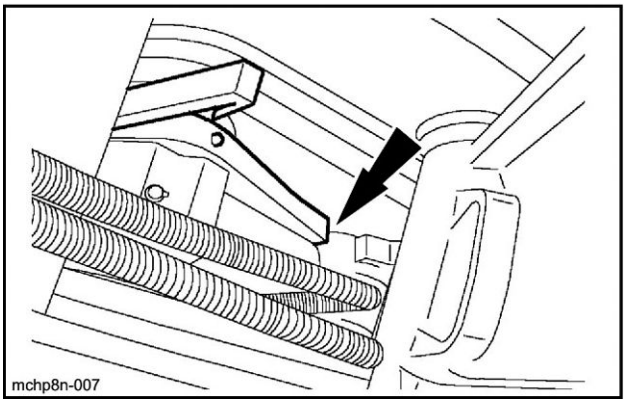

MCHP8N-007 2

3. Check the opening measurement **(S)** of the latching hook.

⚠ WARNING

Falling object hazard!
If the measurement (S) exceeds the maximum authorized value, do not use the quick coupler. Contact your dealer.
Failure to comply could result in death or serious injury.

W0270A

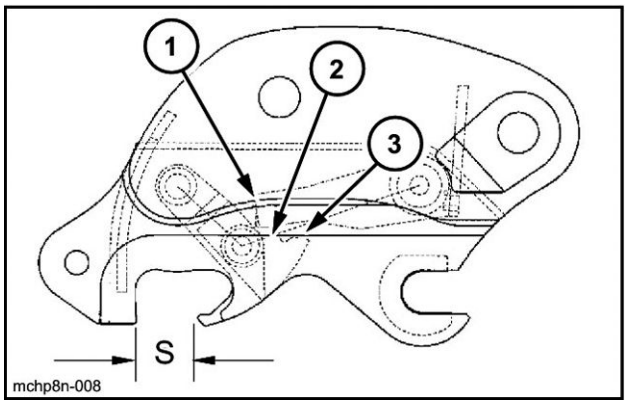

MCHP8N-008 3

Under no circumstances may the measurement **(S)** exceed (Locking bar resting on surface):
(1): **101.6 mm** (**4.0 in**)
(2): **61.6 mm** (**2.4 in**)
(3): **29.8 mm** (**1.2 in**)

Otherwise, consult your CASE CONSTRUCTION Dealer.

Make sure the locking bar is not damaged. Check that it functions correctly and is not fouled by foreign matter.

Incorrect operation of the quick coupler

ATTENTION: *Make sure that the attachment is resting on the ground. Shut down the engine and remove the ignition key before carrying out one of the following checks.*

If the quick coupler does not work correctly, check the following items:

1. That no pin is broken, bent or lost.
2. That the cylinder is not damaged or bent.
3. That there are no leaks from hydraulic hoses, etc.

If the problem persists after all these checks, consult your CASE CONSTRUCTION Dealer.

Modification of the quick coupler without prior authorization can cause serious injury. Do not carry out any modification without authorization from your CASE CONSTRUCTION Dealer.

NOTICE: *If you use your quick coupler in particularly harsh conditions (dusty or corrosive atmosphere, etc.), the servicing intervals should be reduced accordingly.*

Air conditioning

⚠ WARNING

Maintenance hazard!
Never try to service the air-conditioning system yourself. Contact your dealer for service.
Failure to comply could result in death or serious injury.

W0268A

Service specifications

Cleaning the circulation filter: Every 50 hours
Cleaning the air circulation filter: Every 50 hours
Replace the filter: Every 2000 hours
Have a checked by a specialist: Every 6 months

The components of the air conditioning system need servicing at regular intervals. Make sure these intervals are respected, in order to ensure the air conditioning functions correctly and with maximum effectiveness. The air conditioning system contains gas which is subject to strict legislation. Any defect in the system must be fixed rapidly.

NOTE: *Operate the air conditioning system at least once a week, even if only for a short time. (Refer to page **3-52**).*

Inspection

In order to ensure the air conditioning functions correctly, inspect the air conditioner using the procedure outlined below before starting work.

Cleanliness of the condenser

If the condenser is dirty it will not dissipate heat properly. Clean the condenser in water.

ATTENTION: *Never use water under pressure to clean the condenser.*

Checking the belt tension

Use your finger to exert pressure of around **10 kg** (**22.0 lb**) on the center of the drive belt. The tension slack should be between about **6 mm** (**0.2 in**)and **8 mm** (**0.3 in**). If necessary, adjust the belt tension.

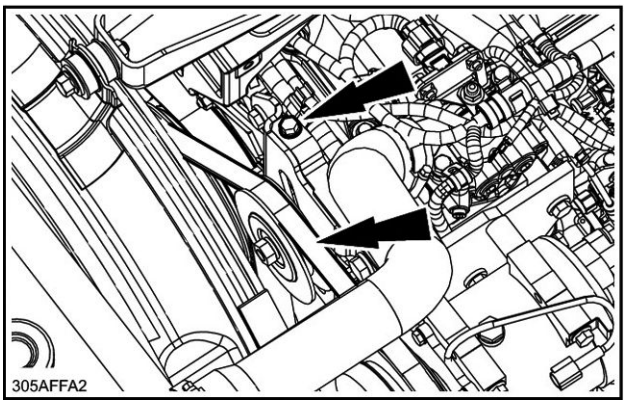

305AFFA2 1

Checking the lines

Make a visual check of the lines and make sure there are no accumulations of dust, grease, etc.

Cleaning the circulation filter

⚠ WARNING

Flying debris!
Compressed air can propel dirt, rust, etc. into the air. Wear eye and face protection when using compressed air.
Failure to comply could result in death or serious injury.

W0307A

1. Remove the filter and clean it with compressed air. If the filter is damaged, replace it.
2. Install the filter.

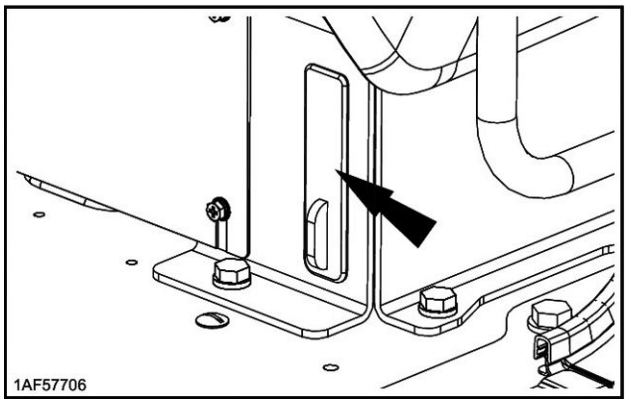

1AF57706 2

Cleaning the suction filter

⚠ WARNING

Flying debris!
Compressed air can propel dirt, rust, etc. into the air. Wear eye and face protection when using compressed air.
Failure to comply could result in death or serious injury.

W0307A

1. Remove the air circulation filter located on the bottom of the back of the operator's seat and clean it with compressed air. If the filter is damaged, replace it.

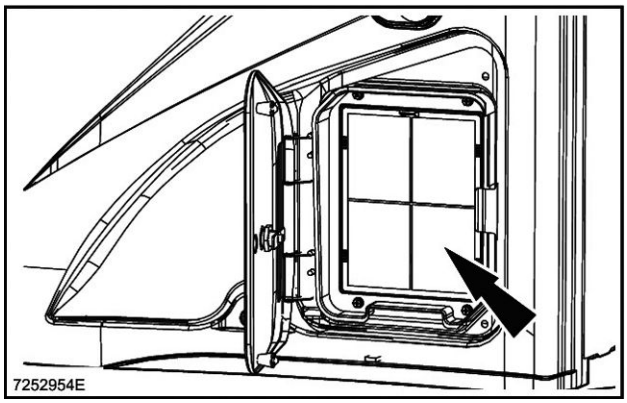

7252954E 3

2. Follow the installation procedure and place the filter in the housing.

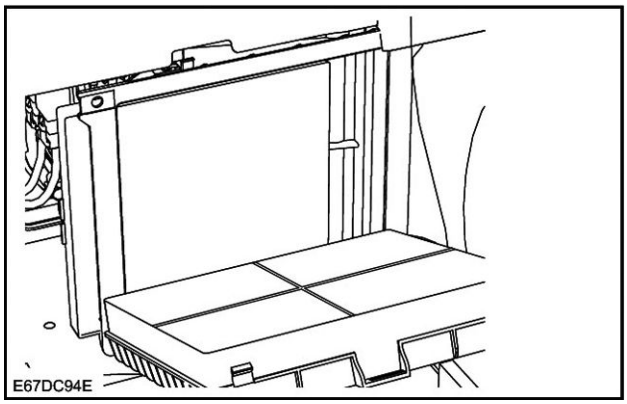

E67DC94E 4

Checking the charge state of the system

1. Turn on the air conditioning system, increase engine speed slightly (1400 to 1600 rpm) and look for bubbles through the sight glass.

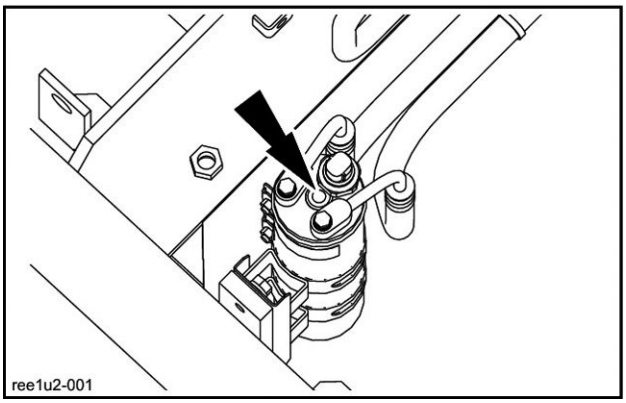

REE1U2-001 5

2. This check should be made approximately one minute after turning on the air conditioning.

(A) Very few bubbles observed, then transparent at first, then whitish: "Normal".

(B) The bubbles are numerous: check the unions and consult your CASE CONSTRUCTION Dealer.

(C) No bubbles are visible: check the unions and consult your CASE CONSTRUCTION Dealer.

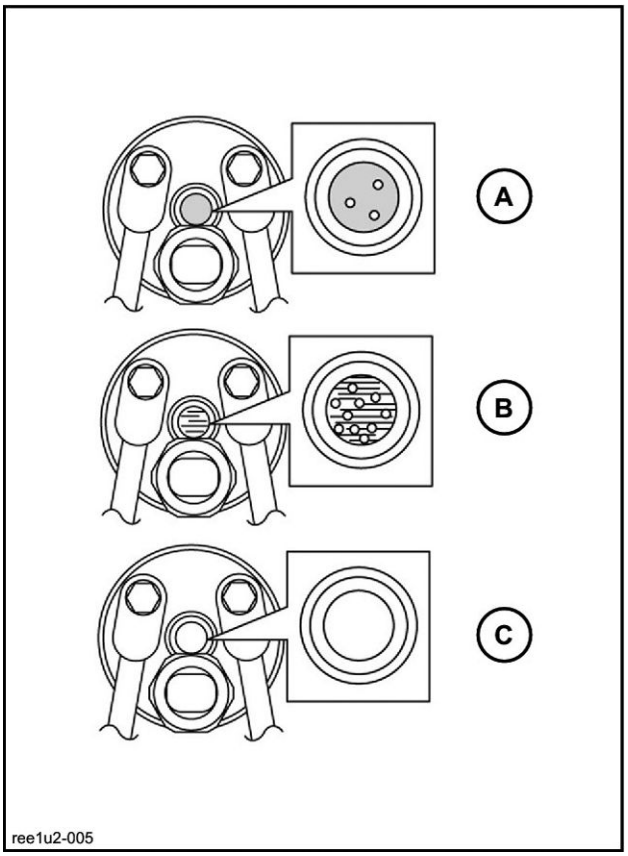

REE1U2-005 6

3. Check if the air-conditioning line and hose connectors are dirty or dusty and clean them if necessary.

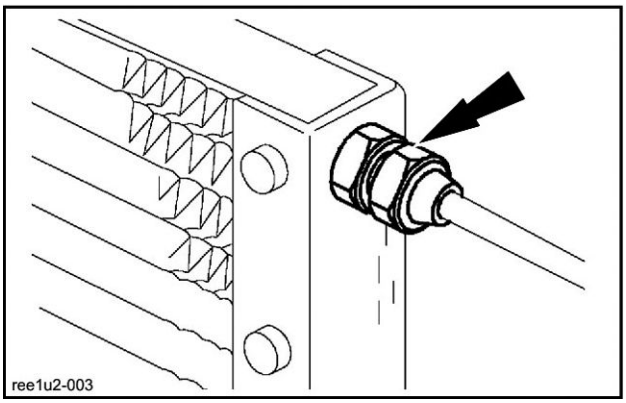

REE1U2-003 7

Diesel particulate diffuser (DPD)

Service specifications

Check: Every 4500 hours

Consult your CASE CONSTRUCTION Dealer to perform the **DPD** (Diesel Particulate Diffuser) inspection.

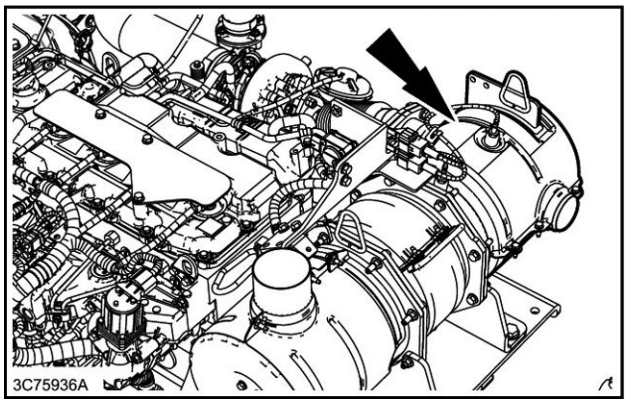

3C75936A 1

Gas spring inspection

⚠ WARNING

Explosive gas!
Gas struts contain high-pressure nitrogen gas. If handled improperly, they could explode.
- Do not disassemble.
- Do not expose to flame or fire.
- Do not puncture, weld, or melt.
- Do not expose to shock by striking or turning.
- The fill gas must be removed before disposal. Consult your dealer.
Failure to comply could result in death or serious injury.

W0914A

Gas springs are located on the cab sunroof (2 locations left and right).
For the following, request inspection, service, or replacement from your CASE CONSTRUCTION Dealer.

- When the cab sunroof does not open with little effort.
- When the cab sunroof does not stay open.
- When an oil or gas leak is discovered from the gas spring.

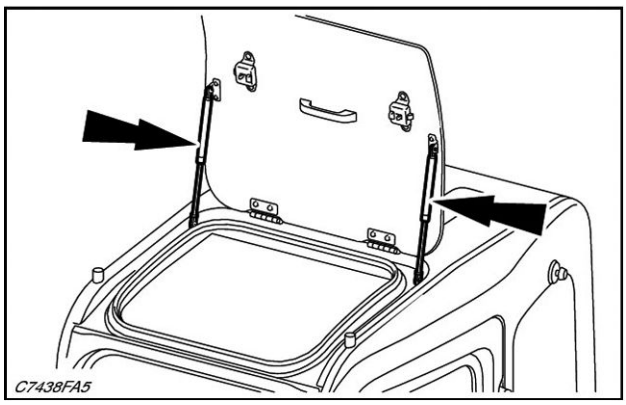

C7438FA5 1

Torque specifications

Service specifications

Check: Every 250 hours (after the first 50 hours during the run-in period)

At the end of each working day, check all mounting nuts and screws for tightness and tighten if necessary. Make sure no hardware items are missing. Replace them, if necessary.

Torque specifications per component

Component	Screw	Wrench		Torque setting	
	(Ø)	mm	in	Nm	lb ft
Travel reduction gear (*)	M16	24	0.9	267–312	197–230
Drive sprocket (*)	M16	24	0.9	267–312	197–230
Idler wheel (*)	M16	24	0.9	267–312	197–230
Upper roller (*)	M16	24	0.9	267–312	197–230
Lower roller (*)	M16	24	0.9	267–312	197–230
Chain guide (*)	M16	24	0.9	267–312	197–230
Track pad	M16	24	0.9	373–451	276–332
Counterweight	M30	46	1.8	1335–1550	985–1143
Turntable	M16	24	0.9	280–312	207–230
Swing reduction gear (*)	M16	24	0.9	280–312	207–230
Engine (*)	M12	19	0.7	109–127	81–93
Engine mount (*)	M16	24	0.9	265–314	196–231
Radiator	M12	19	0.7	64–73	48–54
Hydraulic pump (*)	M16	14 (Hexagon wrench)	0.6 (Hexagon wrench)	223–247	165–182
Hydraulic reservoir (*)	M16	24	0.9	233–276	172–203
Fuel tank (*)	M16	24	0.9	233–276	172–203
Control valve (*)	M16	24	0.9	267–312	197–230
Hydraulic swivel (Locking bar) (*)	M12	19	0.7	89–107	66–78
Hydraulic swivel (Joint) (*)	M12	19	0.7	109–127	81–93
Cab	M16	24	0.9	149–173	110–127
Batteries	M10	17	0.7	20–29	15–21

NOTE: *Use Loctite 262, or the equivalent, on screws marked (*).*

Fuses

NOTE: *Before changing fuses or relays, turn the ignition key to the "Shut down" position, wait one minute minimum and place the key of the battery master switch in* ***"O"*** *(Off) position (if equipped).*

ATTENTION: *Never replace a fuse with a fuse of a different amperage.*

To access the fuse box, open the cover located behind the operator's seat.

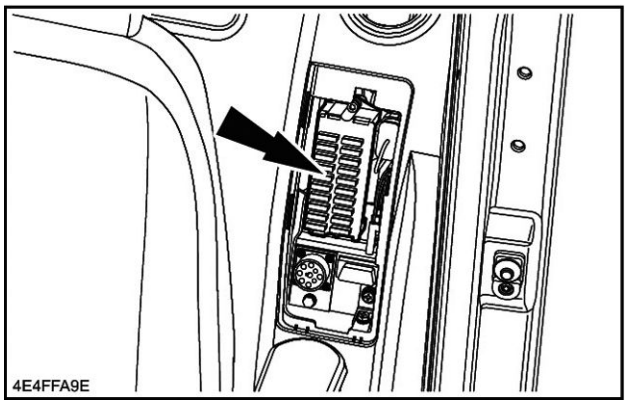

4E4FFA9E 1

To access the fuses, remove the cover on the box. A notice on the cover gives the function and amperage of each fuse.

NOTE: *To remove or install a fuse, use the notch in the upper right-hand corner of the cover.*

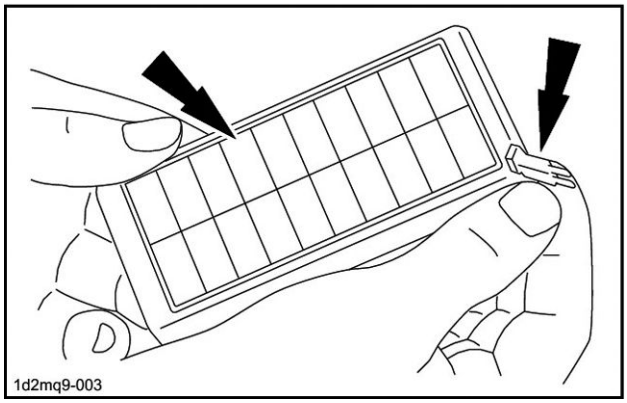

1D2MQ9-003 2

Fuse functions

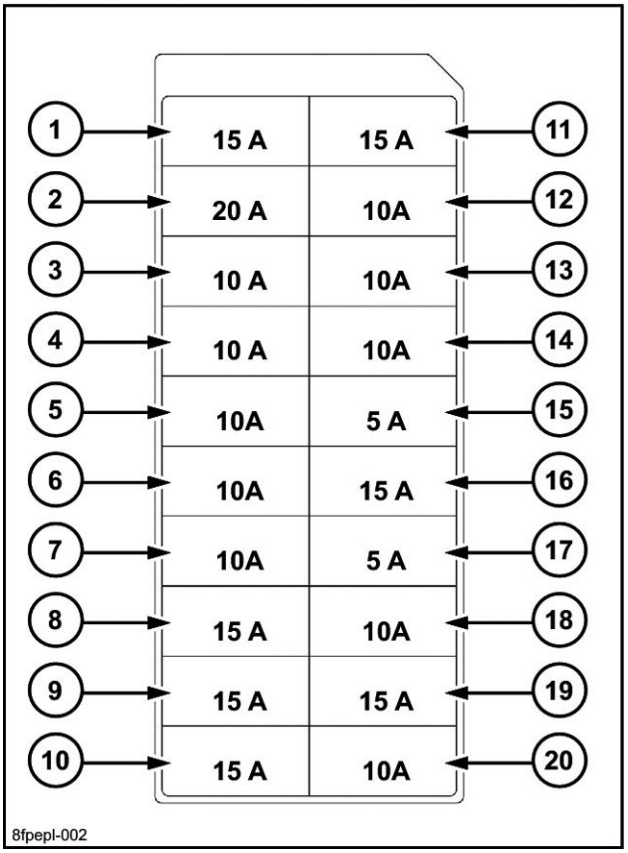

8FPEPL-002 3

(1) Key switch: **15 A**

(2) Engine computer: **20 A**

(3) Spare: **10 A**

(4) Back-up (radio, room lamp): **10 A**

(5) Function cancellation lever: **10 A**

(6) Solenoid: **10 A**

(7) Horn: **10 A**

(8) Cab top light: **15 A**

(9) Boom, house light: **15 A**

(10) Spare: **15 A**

(11) Wiper, washer: **15 A**

(12) Travel alarm, rotary light: **10 A**

(13) Cigar lighter, seat suspension: **10 A**

(14) DC converter: **10 A**

(15) Air conditioner unit: **5 A**

(16) Air conditioner blower motor: **15 A**

(17) Air conditioner compressor: **5 A**

(18) Spare: **10 A**

(19) Feed pump: **15 A**

(20) Option line solenoid: **10 A**

NOTE: *A fuse of **5 A** , located on the rear of the operator's seat, is used for **GPS** system (optional).*

Batteries

⚠ WARNING

Improper operation or service of this machine can result in an accident.
Before working on any component(s) of the electrical circuit, put the ignition key in the off (shut down) position. When disconnecting batteries, always disconnect the negative (-) cable first. When reconnecting batteries, always connect the negative (-) cable last.
Failure to comply could result in death or serious injury.

W0943A

⚠ WARNING

Battery acid causes burns. Batteries contain sulfuric acid.
Avoid contact with skin, eyes or clothing. Antidote (external): Flush with water. Antidote (eyes): flush with water for 15 minutes and seek medical attention immediately. Antidote (internal): Drink large quantities of water or milk. Do not induce vomiting. Seek medical attention immediately.
Failure to comply could result in death or serious injury.

W0111A

⚠ WARNING

Battery gas can explode!
To prevent an explosion: 1. Always disconnect the negative (-) battery cable first. 2. Always connect the negative (-) battery cable last. 3. Do not short circuit the battery posts with metal objects. 4. Do not weld, grind, or smoke near a battery.
Failure to comply could result in death or serious injury.

W0011A

⚠ WARNING

Explosive gas!
Batteries emit explosive hydrogen gas and other fumes while charging. Ventilate the charging area. Keep the battery away from sparks, open flames, and other ignition sources. Never charge a frozen battery.
Failure to comply could result in death or serious injury.

W0005A

Service specifications

Checking the charge state: Every 250 hours
Electrolyte level check: Every 250 hours

NOTE: *When starting the machine with booster batteries, see "Connecting booster batteries".*

Batteries access

To access the batteries, open the left-hand rear door then remove the skid plate.

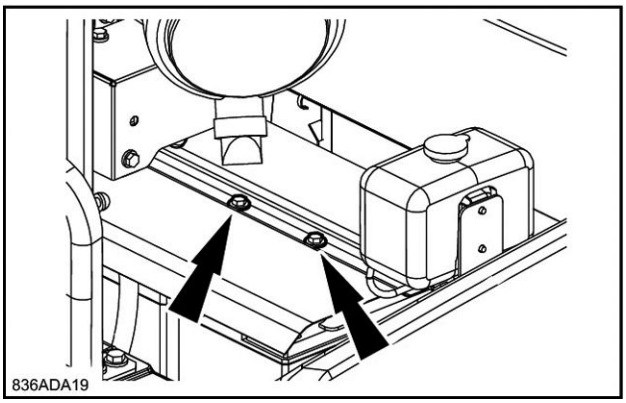

836ADA19 1

Checking the charge state of a maintenance-free battery

The charge indicator on the battery shows the state of charge of the battery.

If the colour is:

- Green; the charge is correct.
- Black; insufficient charge. Recharge the battery until the indicator turns green.
- Transparent (colourless); replace the battery as soon as possible.

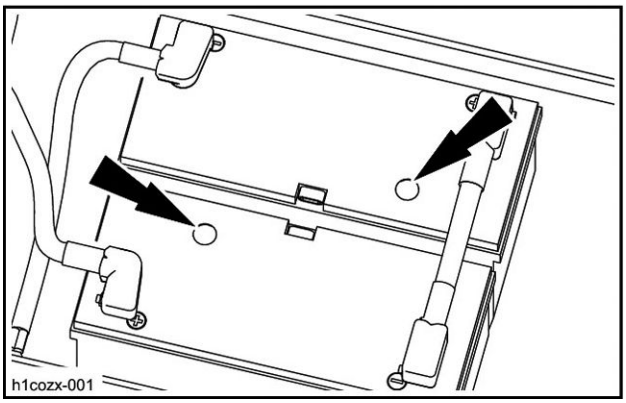

H1COZX-001 2

Checking the electrolyte level of a maintenance-type battery

Remove the cell caps and check the level in each batteries cell. The level should be between **10 mm** (**0.4 in**) and **15 mm** (**0.6 in**) above the plates. Add distilled water if necessary, then install the cell caps.

ATTENTION: *When adding distilled water at temperatures below **0 °C** (**32.0 °F**), the batteries must be charged or the engine run for two hours approximately in order to ensure that the distilled water and the electrolyte are properly mixed.*

NOTE: *Make sure the battery terminals are clean and coated with grease and that the cables are properly tightened.*

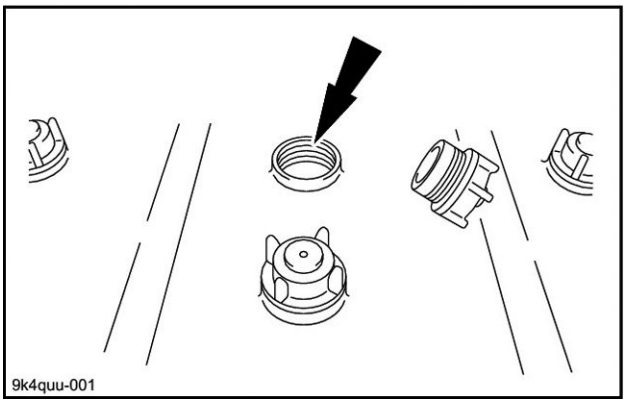

9K4QUU-001 3

Changing a battery

⚠ WARNING

Electrical shock hazard!
Do not reverse battery terminals. Connect positive cable ends to positive terminals (+) and negative cable ends to negative terminals (-).
Failure to comply could result in death or serious injury.

W0262A

⚠ WARNING

Hazard to bystanders!
Always store batteries in a safe location. Keep out of reach of children and other unauthorized persons.
Failure to comply could result in death or serious injury.

W0224A

⚠ WARNING

Battery acid causes burns. Batteries contain sulfuric acid.
Battery electrolyte contains sulfuric acid. Contact with skin and eyes could result in severe irritation and burns. Always wear splash-proof goggles and protective clothing (gloves and aprons). Wash hands after handling.
Failure to comply could result in death or serious injury.

W0120A

1. Place the key of the battery master switch in **"O"** (Off) position (if equipped).
2. Remove the terminal protection caps, disconnect cables (negative terminals) and then cables (positive terminals). Remove the anti-sulphate pellets and the battery clips.
3. Install a new battery, put back its clips.
4. Clean the cables and battery terminals and coat them with grease.
5. Install new anti-sulphate pellets, reconnect positive cable ends to positive terminals and then negative cable ends to negative terminals. Install the terminal protection caps.
6. Install the skid plate.
7. Place the key of the battery master switch in **"I"** (On) position (if equipped).

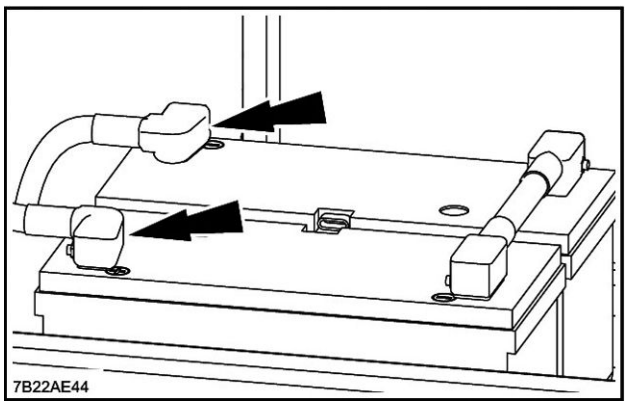

7B22AE44 4

Connecting booster batteries

⚠ WARNING

Improper operation or service of this machine can result in an accident.
An error connecting auxiliary starting cables or short-circuiting battery terminals can cause an accident. Connect auxiliary starting cables as instructed in this manual.
Failure to comply could result in death or serious injury.

W0263A

Make sure that the booster battery voltage corresponds to the voltage system of the machine (24 volts).

1. Place the key of the battery master switch in **"O"** (Off) position (if equipped).
2. Remove the terminal sleeves.
3. Connect the positive **(+)** cable to the positive **(+)** terminal on the first machine battery.
4. Connect the negative **(-)** cable to the negative **(-)** terminal on the second machine battery.
5. Place the key of the battery master switch in **"I"** (On) position (if equipped).
6. Start the engine.
7. Remove the booster battery negative **(-)** cable and then the positive **(+)** cable.
8. Install the terminal sleeves.

Alternator

⚠ WARNING

Improper operation or service of this machine can result in an accident.
Welding sparks can cause battery gases to explode. When welding on the machine, always disconnect the B+ and D+ wires from the alternator. Check the wire markings before reconnecting to ensure a correct connection.
Failure to comply could result in death or serious injury.

W0253A

Service specifications

Check: Every 1000 hours

ATTENTION: *Do not use steam cleaning equipment or a cleaning solvent to clean the alternator.*

Ask your CASE CONSTRUCTION Dealer to check the alternator.

NOTE: *Make sure that the terminal protectors are correctly installed.*

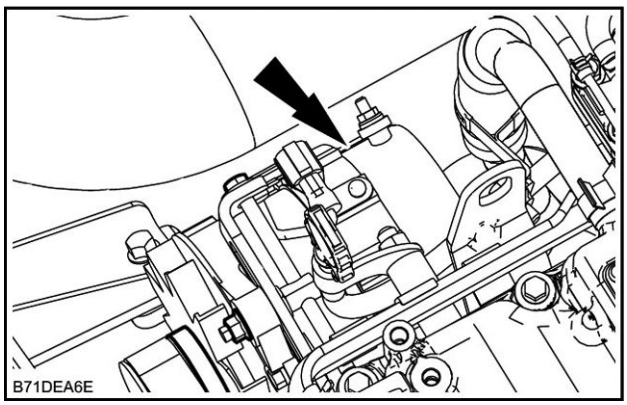

B71DEA6E 1

Starter motor

Service specifications

Check: Every 1000 hours

Ask your CASE CONSTRUCTION Dealer to check the starter motor.

NOTE: *Make sure that the terminal protectors are correctly installed.*

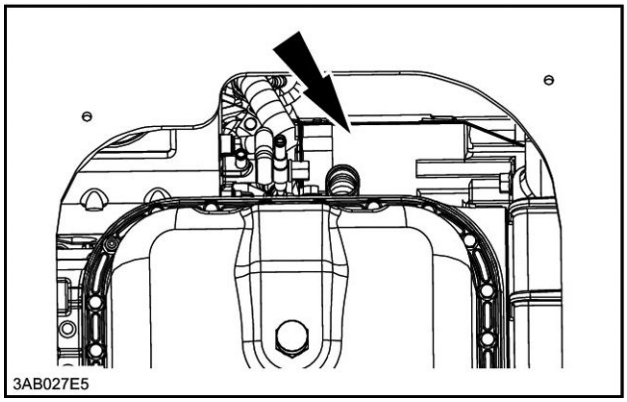

3AB027E5 1

Bulb replacement

Operator’s compartment lighting

1. Remove the cover.
2. Remove the bulb and install a bulb of the same wattage (**10 W**).
3. Install the cover.

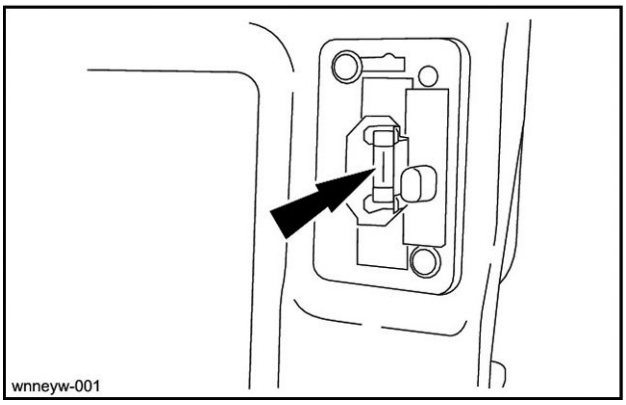

8YHY9K-001 1

Attachment working light

1. Remove the 4 retaining screws.

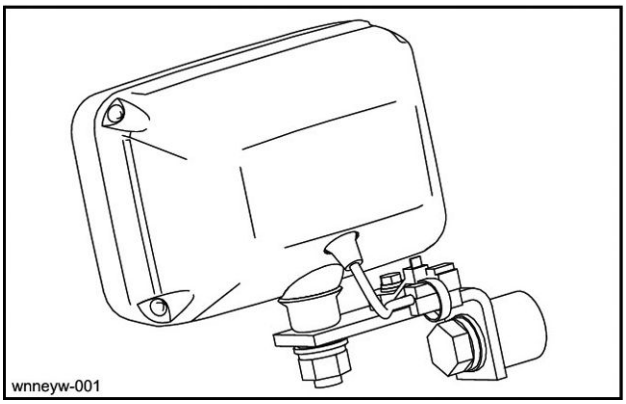

WNNEYW-001 2

2. Tilt the working light and disconnect the plug.

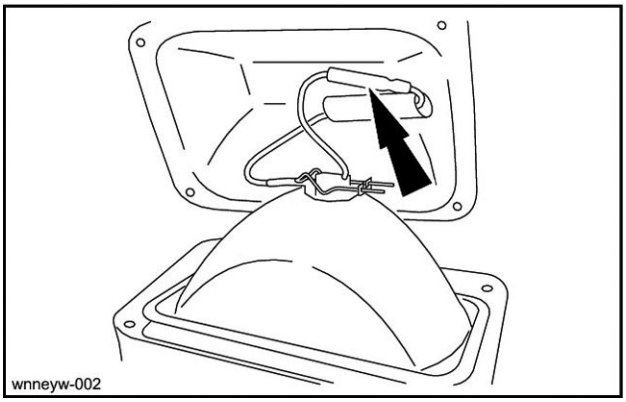

WNNEYW-002 3

3. Pull the clip outward, remove the bulb and install a bulb of the same wattage (**70 W**).

ATTENTION: *Never put your fingers on a tungsten iodide bulb.*

4. Install the clip and reconnect the plug.
5. Put the working light back into position and install the mounting screws.

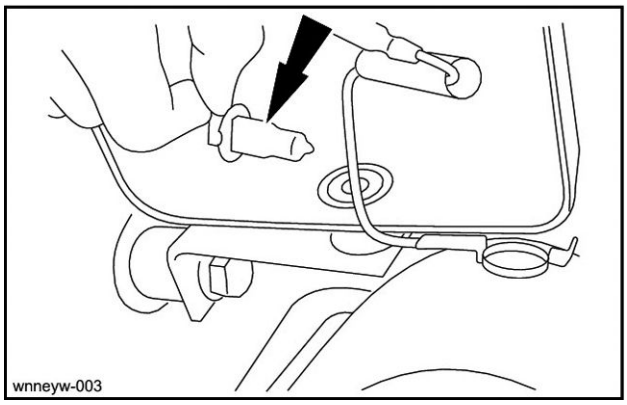

WNNEYW-003 4

Upperstructure and cab headlight

1. Disconnect the plug.

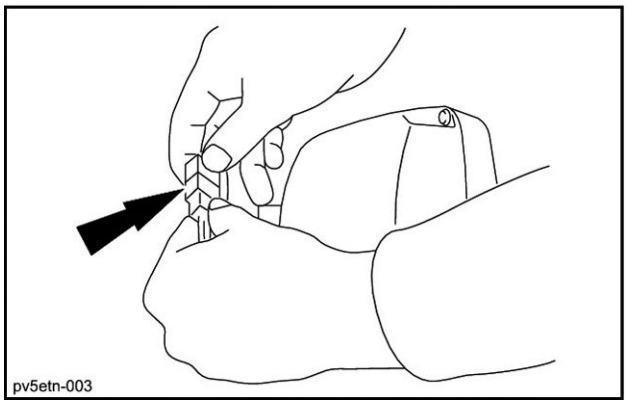

PV5ETN-003 5

2. Remove the four screws and tilt the headlight.

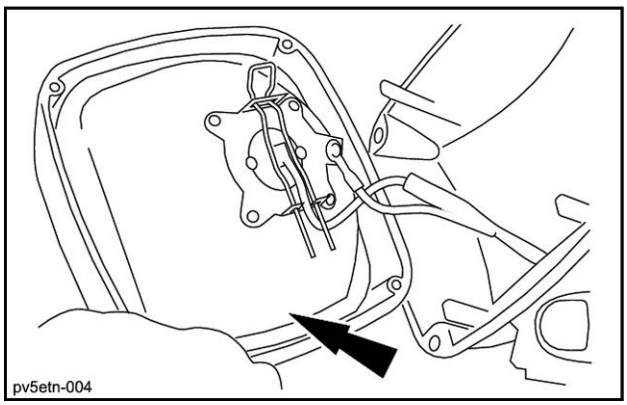

PV5ETN-004 6

3. Pull the clip outward, remove the bulb and install a bulb of the same wattage (**70 W**).

ATTENTION: *Never put your fingers on a tungsten iodide bulb.*

4. Install the clip, put the headlamp back in position and install the screws and the plug.

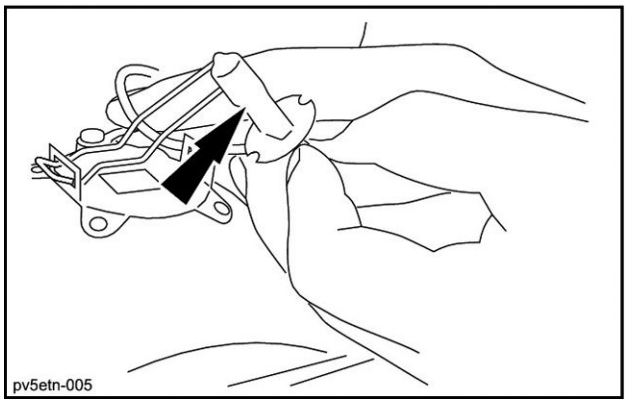

PV5ETN-005 7

MAINTENANCE CHART

Maintenance Chart

Interval	Page no.	Maintenance Action	No. of pts.	Clean	Drain	Check	Grease	Replace	Bleed
Every 10 hours or daily	**6-24**	Engine oil level	1			X			
	6-27	Coolant level	1			X			
	6-30	Fuel tank	1		X				
	6-39	Hydraulic reservoir level	1			X			
	6-60	Radiators and oil coolers	2						X
	6-62	Fan and alternator belt tension	1			X			
Every 50 hours	**6-10**	Tool quick coupler (optional) (Note A)	4				X		
	6-10	Dozer blade (standard machine only)	6				X		
	6-10	Offset boom (if equipped)	12				X		
	6-39	Hydraulic system lines	—			X			
	6-73	Air conditioning (Note B)	1	X					
Every 250 hours	**6-10**	Bucket linkages (Note C)	2				X		
	6-27	Tightening of clamps and radiator hoses (Note D)	—			X			
	6-30	Fuel pre-filter filter element	1					X	
	6-39	Hydraulic reservoir sediment	1		X				
	6-48	Primary air filter element (Note E)	1	X		X			
	6-51	Swing reduction gear level	1			X			
	6-54	Travel reduction gears level	2			X			
	6-56	Pad screw torque (Note F)	—			X			
	6-59	Track rollers and idler wheels	—			X			
	6-62	Fan and alternator belt tension	1			X			
	6-66	Cab protection (**ROPS** and **FOPS**) (optional) (Note F)	1			X			
	6-77	Screw and nut tightening torque (Note F)	—			X			
	6-80	Batteries state	2			X			
	6-80	Batteries electrolyte level	2			X			
Every 500 hours	**6-10**	Turntable bearing	2				X		
	6-10	Turntable bearing teeth	1				X		
	6-24	Engine oil	1					X	
	6-24	Engine oil filter	1					X	
	6-30	Fuel filter element	1					X	
	6-60	Radiators and oil coolers	2	X					
Every 1000 hours	**6-10**	Attachment (except bucket linkages) (Note G)	15				X		
	6-27	Cooling system (Note H)	1		X				
	6-39	Hydraulic fluid condition (Note W)	1			X			
	6-39	Hydraulic reservoir breather	1					X	
	6-48	Primary air filter element (Note J)	1					X	
	6-48	Secondary air filter element (Note K)	1					X	
	6-51	Swing reduction gear (Note L)	1		X				
	6-54	Travel reduction gears (Note L)	2		X				
	4-30	Engine valve rocker clearances (Note M)	—			X			
	6-84	Alternator (Note M)	1			X			
	6-84	Starter motor (Note M)	1			X			

Interval	Page no.	Maintenance Action	No. of pts.	Clean	Drain	Check	Grease	Replace	Bleed
Every 2000 hours	**6-10**	Swing reduction gear	1				X		
	6-39	Suction filter (Note W)	1	X					
	6-39	Return circuit filter (Note N-P-W)	1					X	
	6-39	Pilot filter (Note N-W)	1					X	
	6-73	Air conditioning	1					X	
Every 4000 hours	**6-39**	Main pump output hydraulic hoses (Note Q)	—					X	
	6-39	Boom, dipper and bucket cylinder hydraulic hoses (Note Q)	—					X	
Every 4500 hours	**6-76**	Diesel Particulate Diffuser **(DPD)** (Note M)	1			X			
Every 5000 hours	**6-39**	Inlet filter (Note W)	1					X	
	6-39	Hydraulic fluid (Note R-W)	1					X	
As required	**3-78**	Safety valves on the attachment cylinders (Note S)	3			X			
	-	Safety valves on the dozer blade cylinders (standard machine only) (Note S)	2			X			
	6-30	Fuel pre-filter (Note T)	1						X
	6-30	Fuel filter (Note T)	1						X
	6-30	Fuel supply pump filter (Note U)	1	X					
	6-56	Tracks (Note U)	2	X		X			
	6-64	Fuel tank filter (Note U)	1	X					
	6-64	Fire extinguisher (Note V)	1			X			
	6-66	Machine settings (Note S)	—	X		X			
	6-66	Machine inspection (Note U)	—	X		X			
	6-67	Cylinders for leaks (Note U)	—			X			

Note A: Check every week and whenever installing the quick coupler.

Note B: To be checked every 6 months by a specialist.

Note C: If all these linkage points are not equipped with genuine parts, these points must be greased every 10 hours.

Note D: Or every 6 months.

Note E: Or when the message "Air filter" is shown on the message screens.

Note F: Check after the first 50 hours during the run-in period.

Note G: If all these linkage points are not equipped with genuine parts, these points must be greased every 50 hours.

Note H: Or every two years or twice a year (autumn/spring) if antifreeze is used.

Note J: Or after cleaning 6 times.

Note K: Or after the primary filter has been cleaned 3 times.

Note L: Drain after the first 250 hours during the run-in period.

Note M: Ask your CASE CONSTRUCTION Dealer to check this.

Note N: Replace after the first 250 hours during the run-in period.

Note P: If biodegradable fluid is used, it is imperative for the servicing interval to be reduced to 1000 hours.

Note Q: Or every 2 years, whichever comes first.

Note R: If biodegradable fluid is used, it is imperative for the servicing interval to be reduced to 2000 hours.

Note S: Have this checked every 6 months by your CASE CONSTRUCTION Dealer.

Note T: When the float reaches the level line (A).

Note U: Periodically.

Note V: Check once a month and have it checked every 6 months by a specialist.

Note W: If the machine is equipped with a hydraulic breaker, it is imperative that the servicing intervals are reduced, refer to page **6-39**.

NOTE: *Once the machine has completed 500 hours (then 1000 hours, 1500 hours, etc.) the message "Service due" will appear on the screen (refer to page **3-19**) by way of a reminder that service work is due. (It is possible to increase this lapse of time. Consult your CASE CONSTRUCTION Dealer).*

STORAGE

Preparing for storage

The following procedure applies when the machine is to be stored for a month or more. Store the machine on flat, level ground, inside a building or, if not possible, outside and covered with a tarpaulin. Before storing the machine, carry out the following operations:

1. Clean the machine.
2. Make sure that the machine has no damaged or missing parts. Replace them if necessary.
3. Retract the cylinder rods as for as possible and lower the boom until the attachment is resting on the ground. Lower the dozer blade (if equipped) to the ground.
4. Grease the machine thoroughly. The exposed surfaces of the cylinder rods should be greased or covered with a protective film. Consult your CASE CONSTRUCTION Dealer.

NOTE: *When the machine resumes service, the film will disappear automatically.*

5. While the engine is still warm, drain the oil sump, replace the oil filter and fill with specified oil. Check the oil level and add more if necessary.
6. Clean or replace the air filter element.
7. Check the level of coolant solution. If the machine is within 100 hours of the next scheduled coolant change, change the coolant now.
8. Remove the batteries, clean the battery housings and make sure not to leave any traces of acid. Store the batteries safely in a cool and dry location, where the temperature is higher than **0 °C** (**32.0 °F**) or disconnect the cable from the negative (-) terminal.
9. Paint any areas where the paintwork is not good.
10. Plug the air filter inlet and the exhaust pipe.
11. Remove the ignition key and place a "Do not operate" label on the right-hand control arm and then place the function cancellation lever in the raised position.
12. Lock the hoods, side doors and the cab door.

Periodic checks

⚠ WARNING

Inhalation hazard! Risk to operators and bystanders.
Avoid running the engine in confined areas. Make sure there is adequate ventilation at all times.
Failure to comply could result in death or serious injury.

W0156A

Every month, check:

1. The battery charge and recharge the batteries if required.
2. The levels and top up if necessary.
3. The condition of all lines, connectors and clamps (rust). Grease if necessary.
4. The condition of the paintwork. Apply a coat of anti-rust treatment where necessary.
5. Unplug the air filter inlet and the exhaust pipe.
6. Run the engine at low speed following the starting up procedure and operate the attachment, swing and travel controls.
7. The grease on the cylinder rods.
8. Plug the air filter inlet and the exhaust pipe.

Starting up after storage

⚠ WARNING

Unexpected machine movement!
Before starting the engine, make sure all controls are in the neutral position.
Failure to comply could result in death or serious injury.

W0311A

⚠ WARNING

Inhalation hazard! Risk to operators and bystanders.
Avoid running the engine in confined areas. Make sure there is adequate ventilation at all times.
Failure to comply could result in death or serious injury.

W0156A

1. Drain the fuel tank, the pre-filter and the fuel filter, replace the filter elements if necessary.
2. Fill the fuel tank with suitable fuel. (Refer to page **6-5**).
3. Install the batteries or reconnect the cable to the negative (-) terminal.
4. Grease the machine thoroughly.
5. Check the condition of the fan drive belt and replace it if necessary.
6. Check the condition of the air conditioning drive belt and replace it if necessary.
7. Check the cooling system level and add more coolant if necessary.
8. Check the engine oil level and add more oil if necessary.
9. Check the hydraulic fluid level and add more fluid if necessary.
10. Check the travel reduction gears and swing reduction gear oil level and add more oil if necessary.
11. Clean the cylinder rods.
12. Unplug the air filter inlet and the exhaust pipe.
13. Remove the "Do not operate" tag and start the engine, following the starting up procedure.
14. Check all the indicators and lamps carefully.

NOTICE: *Check the machine and the engine for leaks or for any parts that are broken, defective or missing.*

7 - TROUBLESHOOTING

FAULT CODE RESOLUTION

Engine troubleshooting

NOTE: *This chapter shows how to easily diagnose problems relating to the engine and describes the solutions to be adopted. If you are unable to determine the cause of the failure, or if the latter is difficult to rectify, consult your CASE CONSTRUCTION Dealer.*

PROBLEM	POSSIBLE CAUSE	SOLUTION
Engine does not start. Starter does not rotate or rotation is weak.	Battery master switch in **"O"** (Off) position (if equipped)	Place the battery master switch in **"I"** (On) position (if equipped)
	Battery is running out	Charge or replace
	Disconnection, looseness, or corrosion of the battery terminals	Repair the corroded area, and then tighten securely
	Starter ground wire terminal detached, loose, or corroded	Repair the corroded area, and then tighten securely
	Engine oil viscosity is too high	Replace it with oil with appropriate viscosity
	Starter or electrical system faulty	Consult your CASE CONSTRUCTION Dealer
Engine does not start. Starter turns over.	Battery master switch in **"O"** (Off) position (if equipped)	Place the battery master switch in **"I"** (On) position (if equipped)
	No fuel in fuel tank	Check that there is no fuel leakage and refuel
	Air intrusion in the fuel system	Remove the air
	Clogging of the fuel filter	Remove moisture and replace the element
	Fuel is frozen	Warm up the fuel pipe with hot water, or wait until the air temperature rises
	Failure of the supply pump	Consult your CASE CONSTRUCTION Dealer
	Clogging of the supply pump strainer	Clean the strainer
	Failure of the engine control system	Consult your CASE CONSTRUCTION Dealer
	Preheating system faulty	
	Overflow valve remains open	Clean or replace the supply pump, fuel filter or fuel port overflow valve
The engine starts, but stops immediately.	Clogging of the fuel filter	Remove moisture and replace the element
	Clogging of the pre-fuel filter	Clean or replace the element
	Failure of the engine control system	Consult your CASE CONSTRUCTION Dealer
	Clogging of the air cleaner	Clean or replace the element
	Failure of the supply pump	Consult your CASE CONSTRUCTION Dealer
	Clogging of the supply pump strainer	Clean the strainer
Engine revolution is unstable.	Failure of the fuel system	Consult your CASE CONSTRUCTION Dealer
	Water or air intrusion in the fuel system	Remove the air
	Failure of the engine control system	Consult your CASE CONSTRUCTION Dealer
Engine rotation does not increase.	Clogging of the fuel filter	Remove moisture and replace the element

PROBLEM	POSSIBLE CAUSE	SOLUTION
The exhaust smoke is white.	Insufficient warming-up	Perform warming-up
	Too much engine oil	Adjust to the appropriate oil amount
	Failure of the engine control system	Consult your CASE CONSTRUCTION Dealer
	Failure of the supply pump	
	Failure of the fuel system	
	Continuous idling for a long period (more than two hours)	Raise the engine speed and confirm that white smoke is not emitted
The exhaust smoke is black.	Failure of the engine control system	Consult your CASE CONSTRUCTION Dealer
	Failure of the supply pump	
	Clogging of the air cleaner	Clean or replace the element
	Failure of the fuel system	Consult your CASE CONSTRUCTION Dealer
	Clogging of the exhaust system	
	Diesel Particulate Diffuser is faulty	
Overheat occurs.	No coolant	Refill
	Front of the radiator is clogged with filth	Perform cleaning
	Reserve tank cap not fully tightened	Tighten it securely or replace the cap with a new one
	Coolant is dirty	Clean inside the radiator and replace the coolant
	Failure of the fan clutch	Consult your CASE CONSTRUCTION Dealer
	Reserve tank cap dirty or faulty	Clean or replace the reserve tank cap
	Excessive engine oil	Keep the oil at appropriate level
Oil pressure does not increase.	Inappropriate engine oil viscosity	Replace it with oil with appropriate viscosity
	Amount of engine oil is insufficient	Refill
	Failure inside the engine	Consult your CASE CONSTRUCTION Dealer
	Failure of meters, lights or switches	
	Oil leakage from the oil filter hose	
Engine does not have enough power.	Clogging of the air cleaner	Clean the element
	Clogging of the fuel filter	Remove moisture and replace the element
	Clogging of the pre-fuel filter	Clean the element
	Failure of the engine control system	Consult your CASE CONSTRUCTION Dealer
	Clogging of the supply pump strainer	Clean the strainer
	Failure of the engine	Consult your CASE CONSTRUCTION Dealer
	Diesel Particulate Diffuser is faulty	

8 - SPECIFICATIONS

General specification

Engine

High pressure common rail engine, in conformity, applicable to low fumes emission.

Make and type	ISUZU AM-4JJ1X
Common rail, turbocharger with air cooled intercooler, **DPD** (Diesel Particulate Diffuser) system, fuel cooler	yes
Injection	electric control
Number of cylinders	4
Bore/stroke	**95.4 mm** (**3.8 in**) x **104.9 mm** (**4.1 in**)
Displacement	**2999 cm³/rev** (**183.0 in³/rev**)
Maximum displacement	**359 N·m** (**264.8 lb ft**) at **1600 RPM**
Cooling	by water
Battery starting	2 x **12 V 72 A·h**
Voltage	**24 V**
Alternator	**50 A**
Starter	**24 V 4.0 kW**

Working conditions

Speed	**2000 RPM**
Power	**74.9 kW** (**101.8 Hp**) at **2000 RPM**
Engine oil capacity (with remote oil filter)	**17 l** (**4.5 US gal**)
Fuel tank capacity	**200 l** (**52.8 US gal**)
Fuel filler pump	if equipped
Engine/pump assembly mounted on flexible mountings	
Filtration in dusty conditions	
Electronically controlled governor	

Hydraulic system

2 variable displacement axial piston pumps with regulating system. Main pump max flow (at **2000 RPM**)	2 x **129 l/min** (**34.1 US gpm**)
Fixed flow pump (pilot circuit).Max. flow:	**20 l/min** (**5.3 US gpm**)
Working pressure. Attachment/power boost (monobloc boom)	**343 - 363 bar** (**4973.5 - 5263.5 psi**)
Working pressure. Attachment (offset boom)	**343 bar** (**4973.5 psi**)
Oil cooler with air cooling from engine	
High pressure multispiral hoses minimum safety factor	2 to 4 times the working pressure
Self-lubricating hydraulic swivel	
Hydraulic reservoir capacity	**75 l** (**19.8 US gal**)
Total hydraulic system capacity	**158 l** (**41.7 US gal**)

Control valve

Four control valve sections for right-hand travel, boom/bucket and arm acceleration.
Five control valve sections for left-hand travel, swing, arm, auxiliary attachment and boom acceleration.
One control valve section for dozer blade and offset boom (standard machine only).
Boom/arm load holding valves.

Swing

Fixed displacement axial piston motor	
Mechanical disk brake	
Upperstructure swing speed	**10.6 RPM**

Travel

Two speed hydraulic motors with axial pistons	
Planetary reduction gears	
Low speed	**0 - 3.4 km/h** (**0.0 - 2.1 mph**)
High speed	**0 - 5.6 km/h** (**0.0 - 3.5 mph**)
Gradeability	**70 % (35°)**

Attachment (monobloc boom)

Break-out force (with **2.11 m** (**83.07 in**) arm)	**7000 daN** (**15736.63 lbf**)
Break-out force (with **2.50 m** (**98.43 in**) arm)	**6200 daN** (**13938.16 lbf**)
Break-out force (with **3.01 m** (**118.50 in**) arm)	**5600 daN** (**12589.30 lbf**)

Attachment (offset boom)

Break-out force (with **2.11 m** (**83.07 in**) arm)	**5950 daN** (**13376.14 lbf**)
Break-out force (with **2.41 m** (**94.88 in**) arm)	**5440 daN** (**12229.61 lbf**)

Undercarriage

One-piece frame with welded components	
Lubricated track rollers and idler wheels	
Grease cylinder track tension system	
Steel tracks (standard)	**600 mm** (**23.6 in**)
Steel tracks (optional)	**500 mm** (**19.7 in**)
Steel tracks (optional)	**700 mm** (**27.6 in**)
Ground pressure (standard machine type with monobloc boom)	**0.41 bar** (**5.9 psi**)
Ground pressure (standard machine type with offset boom)	**0.42 bar** (**6.1 psi**)
Ground pressure (**LC** type)	**0.36 bar** (**4.8 psi**)

Safety devices

Control for lowering attachments in case of engine failure	
Controls are disabled by lifting the function cancellation lever or the left-hand control arm	
Engine emergency shut-down, anti-theft protection	
Safety glass, dual horn	
Inertia reel type safety belt	
Rear view mirror (cab side and right side)	
Rear view camera	
Right view camera	optional
Battery master switch (if equipped)	
ROPS: Roll Over Protective Structure	
FOPS: Falling Objects Protective Structure (level 2)	optional
OPG: Operator’s Protective Guard (front cab)	optional
Safety valves	optional
Fire extinguisher	optional
Travel alarm	

Operator's compartment

Deluxe operator's seat with armrests, inertia type safety belt, multi-position adjustment and headrest.
Speed programmer, also provides automatic speed change.
Single-speed wiper plus intermittent mode, washers, heating, defrost, ventilation/air conditioning, cab lights, cigarette lighter, screen control camera back.

Hydraulically assisted controls

Attachment and swing	2 control levers
Travel	3foot pedals
Dozer blade (standard machine only)	1 lever

Working lights

One on upperstructure	**24 V**, **70 W**
One on attachment	**24 V**, **70 W**
Two on cab	**24 V**, **70 W**

Cab

Smooth and round shape design cab, fabricated by press work	
Foldaway windscreen	
Safety glass for all windows	
Shock-less cab suspension by 4–point fluid mounting	
Built-in type full color **LCD** monitor display	
Membrane switch on monitor display	
Floor mat	
Auto air conditioning	
Sun shield	optional
Sliding front window with auto lock	
Radio with auto tuner	
Roof curtain	
Roof hatch	
Windshield protection grid	optional
ROPS: Roll Over Protective Structure	
FOPS: Falling Objects Protective Structure (level 2)	optional
OPG: Operator’s Protective Guard (front cab)	optional
Anti-vandalism protection	optional

Noise level

Guaranteed by the manufacturer.
Outside the operator's compartment (Lwa).
Sound power level **99 dB (A)**.
Inside the operator's compartment (Lpa).
Sound power level **73 dB (A)** : Weighted sound pressure level at the cab measured with the cab door and windows closed and with the heating/ventilation system fan at maximum speed.

Weight

Machine (standard type)

With monobloc boom, **2.50 m** (**98.43 in**) arm, **520 l** (**137.4 US gal**) backhoe bucket, **600 mm** (**23.6 in**) pads, operator, lubricant, coolant, full fuel tank and counterweight	**15100 kg** (**33289.8 lb**)

With offset boom, **2.11 m** (**83.07 in**) arm, **520 l** (**137.4 US gal**) backhoe bucket, **600 mm** (**23.6 in**) pads, operator, lubricant, coolant, full fuel tank and counterweight	**15700 kg** (**34612.6 lb**)

Machine (LC type)

With monobloc boom, **2.50 m** (**98.43 in**) arm, **520 l** (**137.4 US gal**) backhoe bucket, **600 mm** (**23.6 in**) pads, operator, lubricant, coolant, full fuel tank	**14500 kg** (**31967.0 lb**)

Counterweight

Weight	**3700 kg** (**8157.1 lb**)

Dimension

Overall machine dimensions (standard type with monobloc boom)

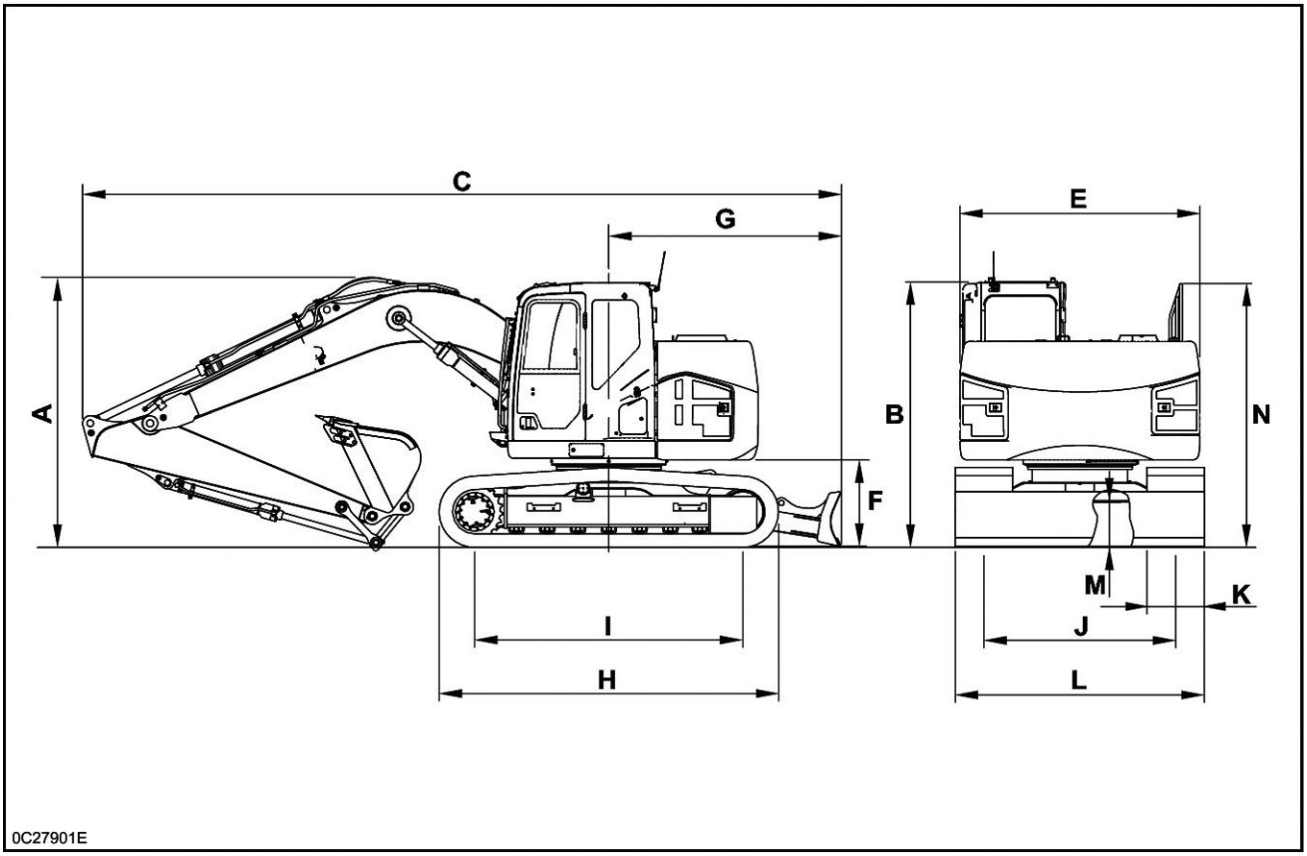

0C27901E 1

Arms	2.11 m (83.07 in)	2.50 m (98.43 in)	3.01 m (118.50 in)
(A)	2.72 m (107.09 in)	2.79 m (109.84 in)	2.60 m (102.36 in)
(B)	2.80 m (110.24 in)	2.80 m (110.24 in)	2.80 m (110.24 in)
(C)	7.87 m (309.84 in)	7.88 m (310.24 in)	7.84 m (308.66 in)
(E)	2.49 m (98.03 in)	2.49 m (98.03 in)	2.49 m (98.03 in)
(F)	0.88 m (34.65 in)	0.88 m (34.65 in)	0.88 m (34.65 in)
(G)	2.41 m (94.88 in)	2.41 m (94.88 in)	2.41 m (94.88 in)
(H)	3.50 m (137.80 in)	3.50 m (137.80 in)	3.50 m (137.80 in)
(I)	2.79 m (109.84 in)	2.79 m (109.84 in)	2.79 m (109.84 in)
(J)	1.99 m (78.35 in)	1.99 m (78.35 in)	1.99 m (78.35 in)
(K) (standard track pads)	0.6 m (23.62 in)	0.6 m (23.62 in)	0.6 m (23.62 in)
(L)	2.59 m (101.97 in)	2.59 m (101.97 in)	2.59 m (101.97 in)
(M)	0.44 m (17.32 in)	0.44 m (17.32 in)	0.44 m (17.32 in)
(N)	2.73 m (107.48 in)	2.73 m (107.48 in)	2.73 m (107.48 in)

Overall machine dimensions (standard type with offset boom)

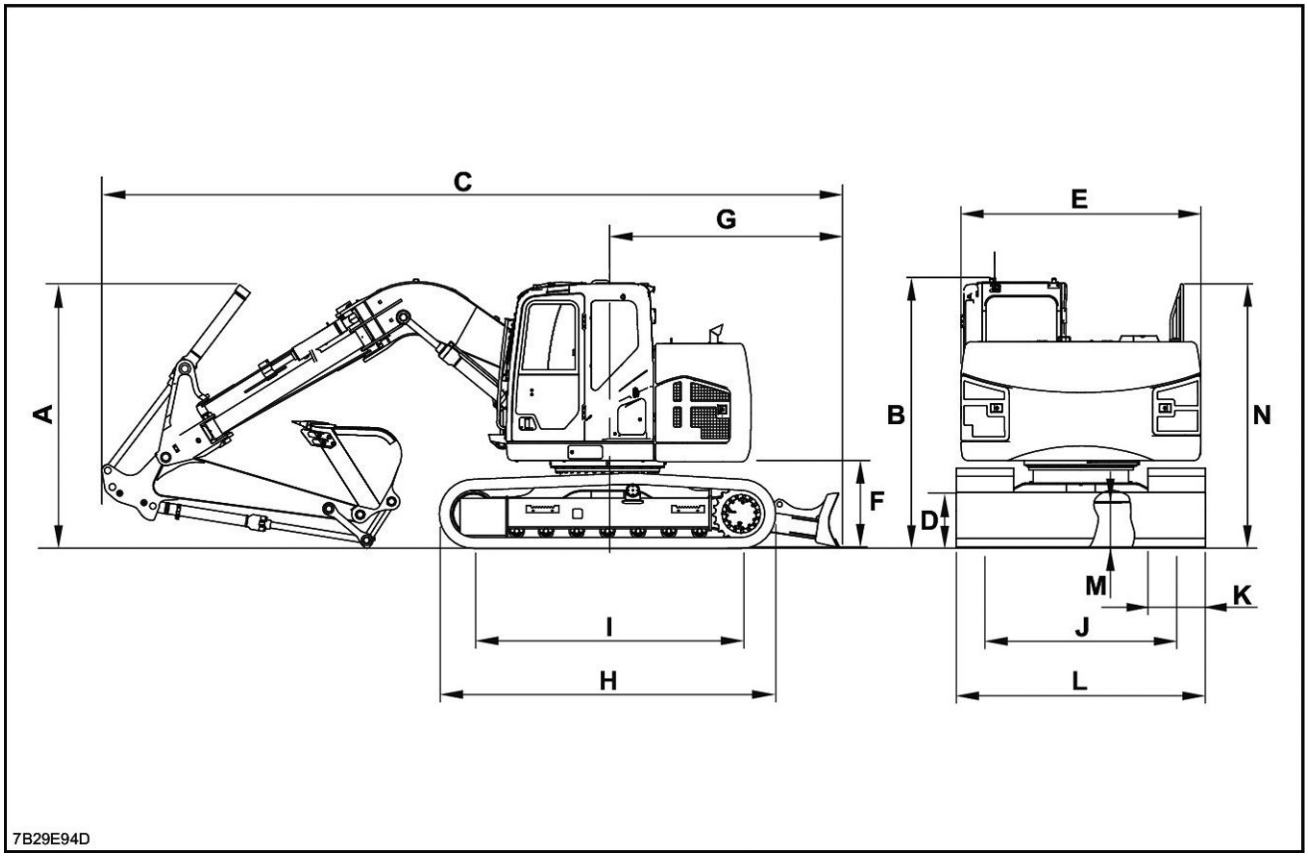

7B29E94D 2

Arms	2.11 m (83.07 in)	2.41 m (94.88 in)
(A)	2.74 m (107.87 in)	2.71 m (106.69 in)
(B)	2.80 m (110.24 in)	2.80 m (110.24 in)
(C)	7.68 m (302.36 in)	7.62 m (300.00 in)
(D)	0.57 m (22.44 in)	0.57 m (22.44 in)
(E)	2.49 m (98.03 in)	2.49 m (98.03 in)
(F)	0.88 m (34.65 in)	0.88 m (34.65 in)
(G)	2.41 m (94.88 in)	2.41 m (94.88 in)
(H)	3.50 m (137.80 in)	3.50 m (137.80 in)
(I)	2.79 m (109.84 in)	2.79 m (109.84 in)
(J)	1.99 m (78.35 in)	1.99 m (78.35 in)
(K) (standard track pads)	0.6 m (23.62 in)	0.6 m (23.62 in)
(L)	2.59 m (101.97 in)	2.59 m (101.97 in)
(M)	0.44 m (17.32 in)	0.44 m (17.32 in)
(N)	2.73 m (107.48 in)	2.73 m (107.48 in)

Overall machine dimensions (LC type)

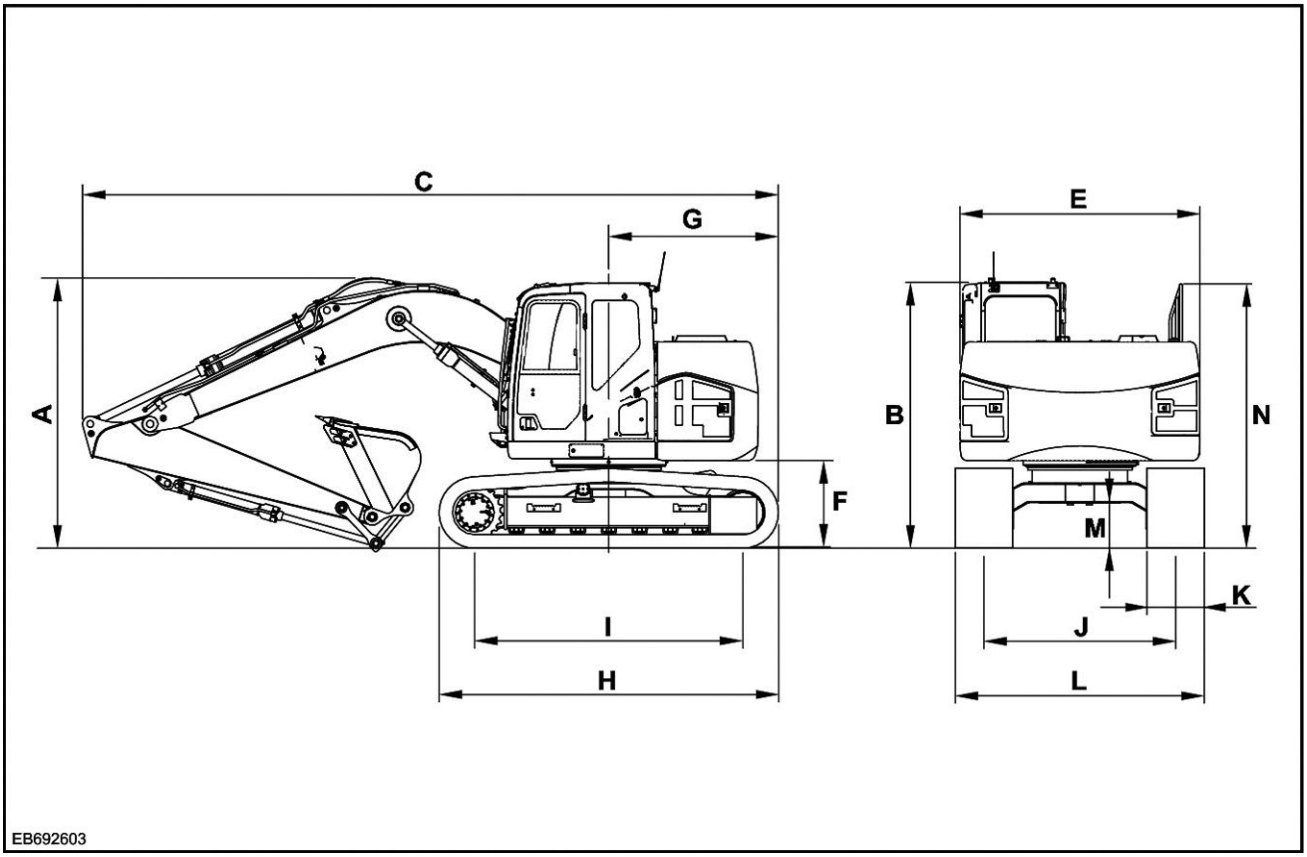

EB692603 3

Arms	2.11 m (83.07 in)	2.50 m (98.43 in)	3.01 m (118.50 in)
(A)	2.72 m (107.09 in)	2.79 m (109.84 in)	2.60 m (102.36 in)
(B)	2.80 m (110.24 in)	2.80 m (110.24 in)	2.80 m (110.24 in)
(C)	7.34 m (288.98 in)	7.35 m (289.37 in)	7.31 m (287.80 in)
(E)	2.49 m (98.03 in)	2.49 m (98.03 in)	2.49 m (98.03 in)
(F)	0.88 m (34.65 in)	0.88 m (34.65 in)	0.88 m (34.65 in)
(G)	1.88 m (74.02 in)	1.88 m (74.02 in)	1.88 m (74.02 in)
(H)	3.76 m (148.03 in)	3.76 m (148.03 in)	3.76 m (148.03 in)
(I)	3.04 m (119.69 in)	3.04 m (119.69 in)	3.04 m (119.69 in)
(J)	1.99 m (78.35 in)	1.99 m (78.35 in)	1.99 m (78.35 in)
(K) (standard track pads)	0.6 m (23.62 in)	0.6 m (23.62 in)	0.6 m (23.62 in)
(L)	2.59 m (101.97 in)	2.59 m (101.97 in)	2.59 m (101.97 in)
(M)	0.44 m (17.32 in)	0.44 m (17.32 in)	0.44 m (17.32 in)
(N)	2.73 m (107.48 in)	2.73 m (107.48 in)	2.73 m (107.48 in)

Boom and arms

Monobloc boom Length	**4.63 m** (**182.28 in**)
Arms Length	**2.11 m** (**83.07 in**) **2.50 m** (**98.43 in**) and **3.01 m** (**118.50 in**)

Offset boom Length	**4.50 m** (**177.17 in**)
Arms Length	**2.11 m** (**83.07 in**) and **2.41 m** (**94.88 in**)

Dozer blade (standard machine only)

Width	**2.59 m** (**101.97 in**)
Height	**0.57 m** (**22.44 in**)
Maximum lift above ground	**0.51 m** (**20.08 in**)
Maximum drop below ground	**0.52 m** (**20.47 in**)

Working range (with monobloc boom)

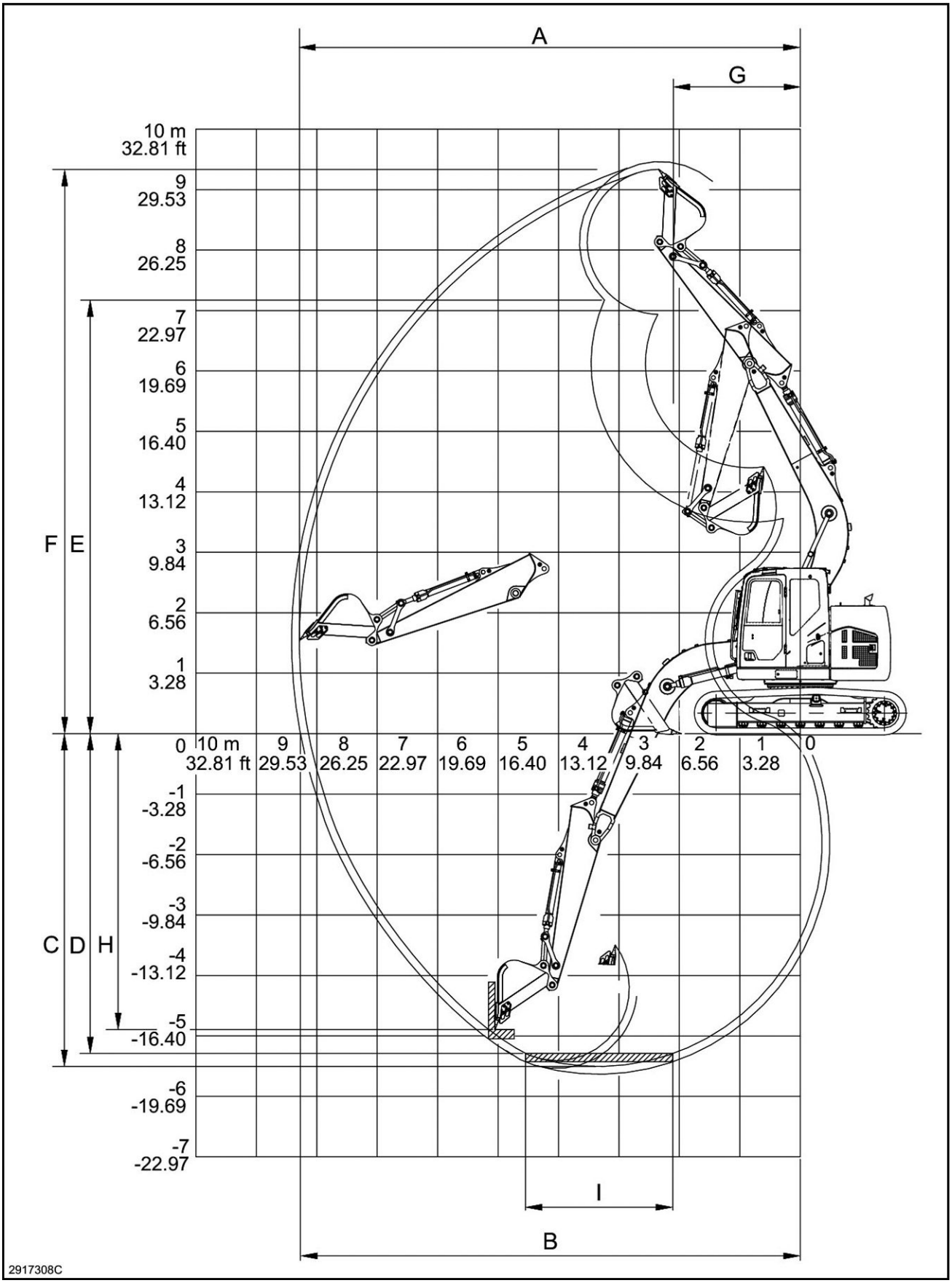

2917308C 4

See next page for the values.

Arms	**2.11 m** (**83.07 in**)	**2.50 m** (**98.43 in**)	**3.01 m** (**118.50 in**)
(A) (Maximum digging reach)	**7.94 m** (**312.60 in**)	**8.29 m** (**326.38 in**)	**8.74 m** (**344.09 in**)
(B) (Maximum digging reach at ground level)	**7.78 m** (**306.30 in**)	**8.14 m** (**320.47 in**)	**8.60 m** (**338.58 in**)
(C) (Maximum digging depth)	**5.11 m** (**201.18 in**)	**5.51 m** (**216.93 in**)	**6.01 m** (**236.61 in**)
(D) (Maximum digging depth over a length of **2.44 m** (**96.06 in**))	**4.87 m** (**191.73 in**)	**5.29 m** (**208.27 in**)	**5.83 m** (**229.53 in**)
(E) (Maximum dump height)	**6.66 m** (**262.20 in**)	**6.94 m** (**273.23 in**)	**7.29 m** (**287.01 in**)
(F) (Maximum working height)	**9.06 m** (**356.69 in**)	**9.34 m** (**367.72 in**)	**9.69 m** (**381.50 in**)
(G) (Minimum attachment swing radius)	**1.89 m** (**74.41 in**)	**1.95 m** (**76.77 in**)	**2.33 m** (**91.73 in**)
(H) (Maximum digging depth on a vertical face)	**4.56 m** (**179.53 in**)	**4.90 m** (**192.91 in**)	**5.28 m** (**207.87 in**)
(I) (Maximum length of flat-bottomed trench)	**2.44 m** (**96.06 in**)	**2.44 m** (**96.06 in**)	**2.44 m** (**96.06 in**)

Working range (with offset boom)

Offset zero

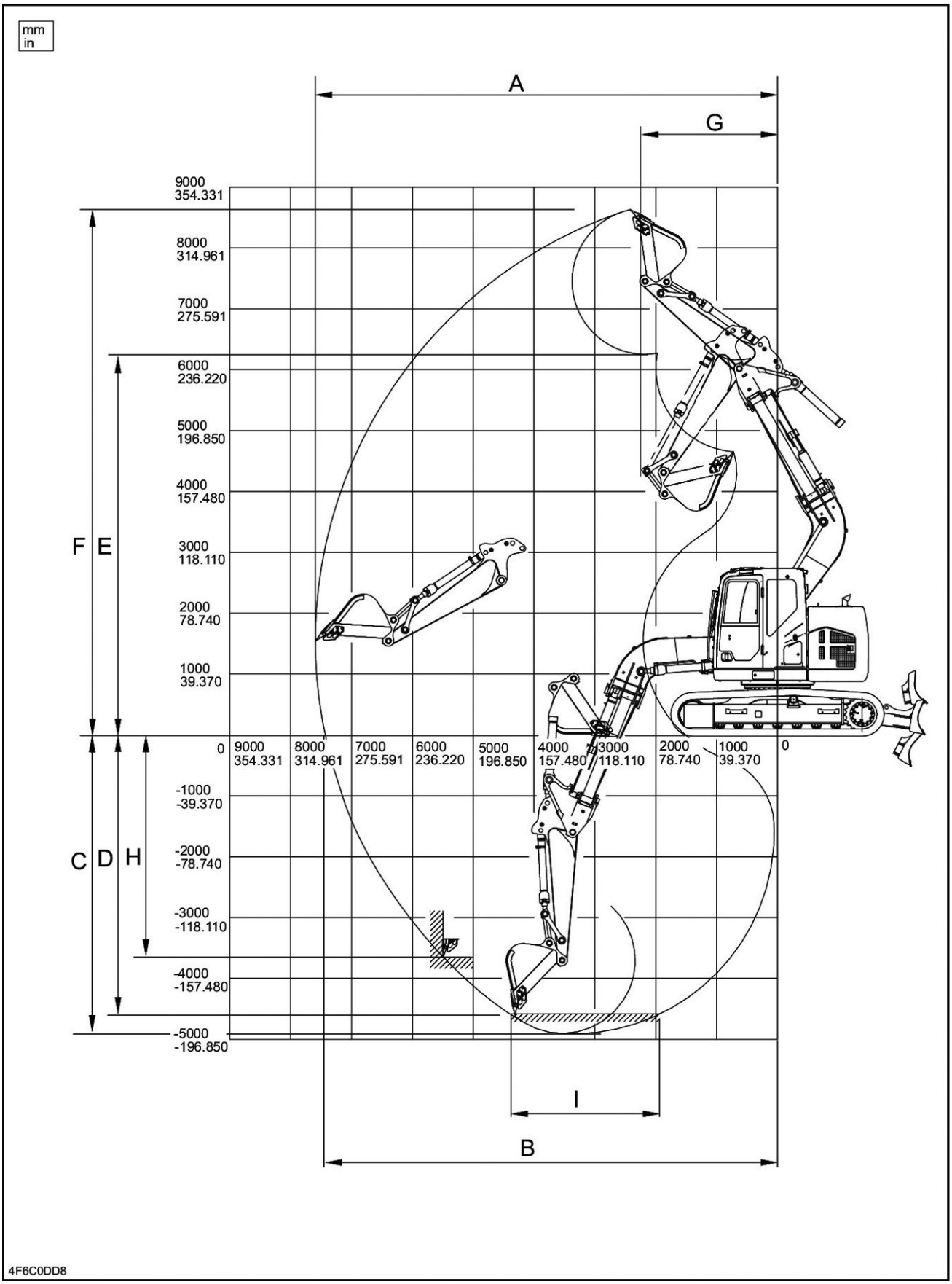

4F6C0DD8 5

See next page for the values.

Arms	**2.11 m** (**83.07 in**)	**2.41 m** (**94.88 in**)
(A) (Maximum digging reach)	**7.59 m** (**298.82 in**)	**7.84 m** (**308.66 in**)
(B) (Maximum digging reach at ground level)	**7.43 m** (**292.52 in**)	**7.69 m** (**302.76 in**)
(C) (Maximum digging depth)	**4.91 m** (**193.31 in**)	**5.21 m** (**205.12 in**)
(D) (Maximum digging depth over a length of **2.44 m** (**96.06 in**))	**4.59 m** (**180.71 in**)	**4.90 m** (**192.91 in**)
(E) (Maximum dump height)	**6.25 m** (**246.06 in**)	**6.43 m** (**253.15 in**)
(F) (Maximum working height)	**8.63 m** (**339.76 in**)	**8.81 m** (**346.85 in**)
(G) (Minimum attachment swing radius)	**2.22 m** (**87.40 in**)	**2.44 m** (**96.06 in**)
(H) (Maximum digging depth on a vertical face)	**3.61 m** (**142.13 in**)	**3.91 m** (**153.94 in**)
(I) (Maximum length of flat-bottomed trench)	**2.44 m** (**96.06 in**)	**2.44 m** (**96.06 in**)

Offset maximum (left)

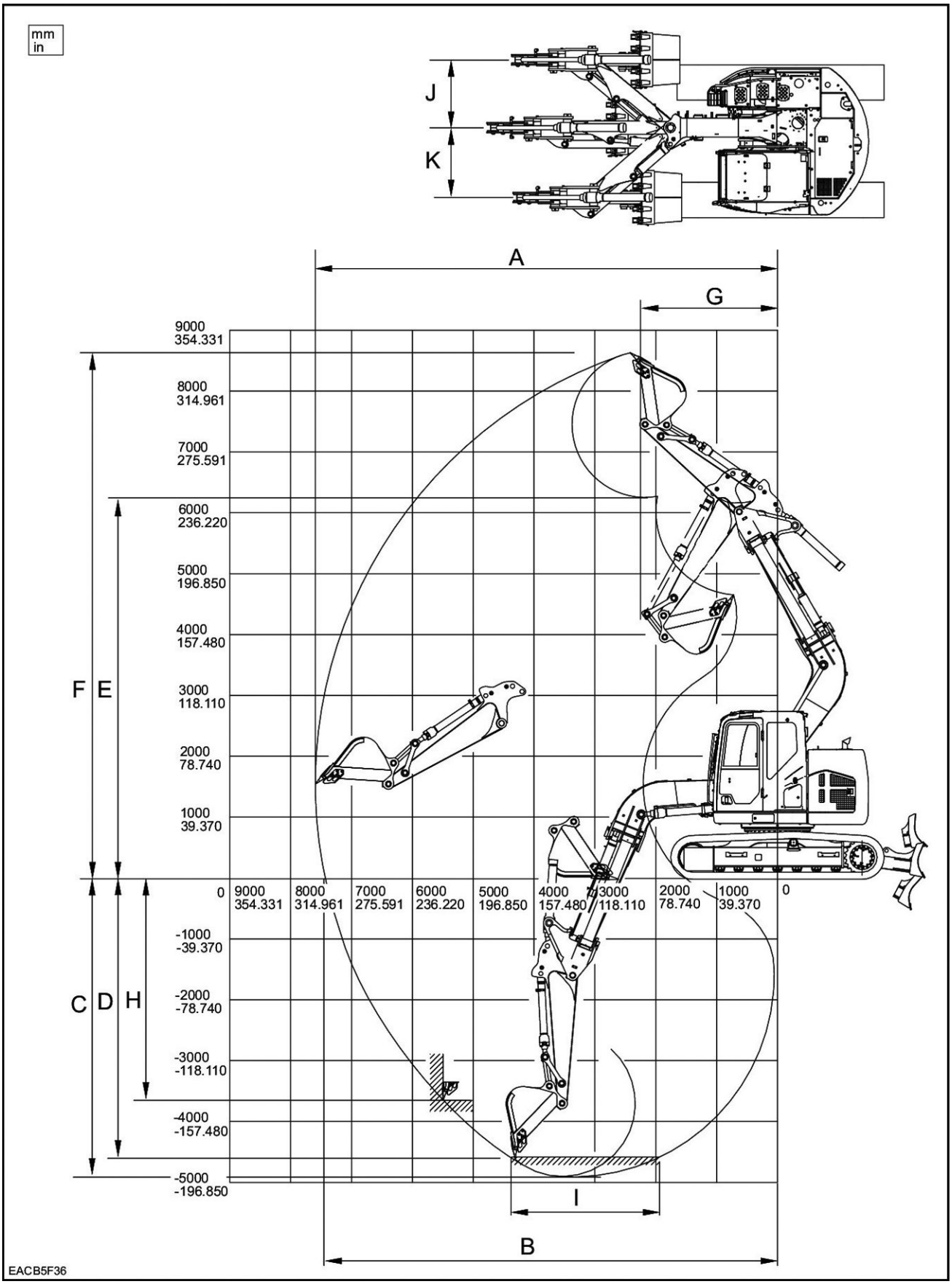

EACB5F36 6

See next page for the value.

Arms	**2.11 m** (**83.07 in**)	**2.41 m** (**94.88 in**)
(A) (Maximum digging reach)	**7.16 m** (**281.89 in**)	**7.41 m** (**291.73 in**)
(B) (Maximum digging reach at ground level)	**6.99 m** (**275.20 in**)	**7.24 m** (**285.04 in**)
(C) (Maximum digging depth)	**4.50 m** (**177.17 in**)	**4.80 m** (**188.98 in**)
(D) (Maximum digging depth over a length of **2.44 m** (**96.06 in**))	**4.17 m** (**164.17 in**)	**4.49 m** (**176.77 in**)
(E) (Maximum dump height)	**5.87 m** (**231.10 in**)	**6.05 m** (**238.19 in**)
(F) (Maximum working height)	**8.25 m** (**324.80 in**)	**8.42 m** (**331.50 in**)
(G) (Minimum attachment swing radius)	**2.01 m** (**79.13 in**)	**2.23 m** (**87.80 in**)
(H) (Maximum digging depth on a vertical face)	**3.25 m** (**127.95 in**)	**3.54 m** (**139.37 in**)
(I) (Maximum length of flat-bottomed trench)	**2.44 m** (**96.06 in**)	**2.44 m** (**96.06 in**)
(J) (Offset right)	**1.15 m** (**45.28 in**)	**1.15 m** (**45.28 in**)
(K) (Offset left)	**1.18 m** (**46.46 in**)	**1.18 m** (**46.46 in**)

Quick coupler (Optional)

Dimensions needed to fit the quick coupler

Bucket pin diameter	**65 mm** (**2.6 in**)
Width between lugs	**220 mm** (**8.7 in**)
Minimum distance between bucket centres	**355 mm** (**14.0 in**)
Maximum distance between bucket centres	**420 mm** (**16.5 in**)

ATTENTION: *The quick coupler described in this manual is designed to be used with CASE buckets. This being said, other buckets may be used, provided the diameter of the pins and the width between the bucket lugs are modified to meet the dimensions needed to fit the quick coupler (pins, washers, bushings, etc.). Consult your CASE CONSTRUCTION Dealer.*

Weight

286 kg (**630.5 lb**)

Overall dimensions

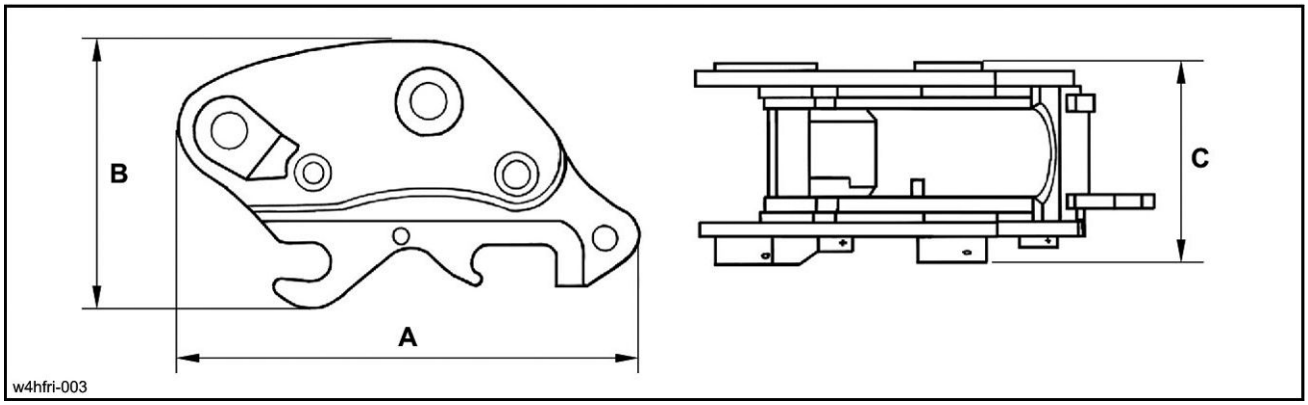

W4HFRI-003 7

(A)	**860 mm** (**33.9 in**)
(B)	**480 mm** (**18.9 in**)
(C)	**390 mm** (**15.4 in**)

Index

ACCESS TO OPERATOR'S PLATFORM 3-1
Frame - Access/Exit 3-1
Position of the operator’s compartment controls and accessories 3-3

COMMISSIONING THE UNIT 4-1
Cab - Operating 4-1
Cab - Running-in Procedure 4-3

CONTROLS/INSTRUMENTS 3-1
Air suspension seat adjustments 3-5
Battery master switch (if equipped) 3-73
Cab internal lighting 3-66
Cab protection (ROPS and FOPS) 3-81
Cab radio 3-60
Cigarette lighter or electrical socket (24 volts) 3-18
Clock adjustment 3-48
Coat hanger hook 3-57
Cup holder 3-62
Diesel particulate diffuser (DPD) 3-37
Dozer blade control lever (standard machine only) 3-63
Emergency exit hammer 3-56
Engine hood 3-74
Frame - Access/Exit 3-1
Front lower window 3-17
Front right-hand console 3-18
Fuel tank 3-67
Fuel tank filler pump (if equipped) 3-79
Function cancellation lever 3-51
Fuse box 3-64
Hand control levers and pedals 3-9
Heating, ventilation or air-conditioning control 3-52
Left-hand control arm 3-49
Load handling eyes 3-76
Lower panels 3-75
Magazine rack 3-57
Menu screen display 3-27
Monitor switches 3-24
Optional tool supply valves (optional) 3-78
Position of the operator’s compartment controls and accessories 3-3
Rear view camera 3-71
Rear view mirrors 3-68
Right-hand console 3-62
Right-hand control arm 3-58
Roof curtain 3-65
Roof hatch 3-65
Safety valves (optional) 3-78
Side doors 3-72
Sliding windows on door 3-57
Sun shield (optional) 3-66
System display and function control panel 3-19
Tool quick coupler locking and unlocking control switch (Optional) 3-56
Towing holes 3-77
Windshield 3-16
Windshield washer reservoir 3-75

EXTERIOR CONTROLS 3-67
Battery master switch (if equipped) 3-73
Cab protection (ROPS and FOPS) 3-81

Engine hood . . . 3-74
Fuel tank . . . 3-67
Fuel tank filler pump (if equipped) . . . 3-79
Load handling eyes . . . 3-76
Lower panels . . . 3-75
Optional tool supply valves (optional) . . . 3-78
Rear view camera . . . 3-71
Rear view mirrors . . . 3-68
Safety valves (optional) . . . 3-78
Side doors . . . 3-72
Towing holes . . . 3-77
Windshield washer reservoir . . . 3-75

FAULT CODE RESOLUTION . . . 7-1
Engine troubleshooting . . . 7-1

FORWARD CONTROLS . . . 3-9
Cigarette lighter or electrical socket (24 volts) . . . 3-18
Clock adjustment . . . 3-48
Diesel particulate diffuser (DPD) . . . 3-37
Front lower window . . . 3-17
Front right-hand console . . . 3-18
Hand control levers and pedals . . . 3-9
Menu screen display . . . 3-27
Monitor switches . . . 3-24
System display and function control panel . . . 3-19
Windshield . . . 3-16

GENERAL INFORMATION . . . 1-1
Description of the main components . . . 1-10
Electro-magnetic interference (EMC) . . . 1-9
Left, right, front and rear of the machine . . . 1-9
Note to the Owner . . . 1-3
Product identification . . . 1-5
Safety rules . . . 1-1
Safety rules . . . 1-2

GENERAL INFORMATION . . . 6-1
Adjustment of engine valve rocker clearances . . . 6-63
Air conditioning . . . 6-73
Air filter . . . 6-48
Alternator . . . 6-84
Basic instructions . . . 6-1
Batteries . . . 6-80
Bulb replacement . . . 6-85
Cab protection (ROPS and FOPS) (optional) . . . 6-66
Checking the cylinders for leaks . . . 6-67
Checking the machine settings . . . 6-66
Checking the opening of the quick coupler locking hook (optional) . . . 6-71
Cooling system . . . 6-27
Diesel particulate diffuser (DPD) . . . 6-76
Engine . . . 6-24
Fan and alternator drive belt . . . 6-62
Fire extinguisher (not supplied) . . . 6-64
Fluid capacities and lubricant specifications . . . 6-9
Fluids, fuels and lubricants . . . 6-5
Fuel system . . . 6-30
Fuel tank filter . . . 6-64
Fuses . . . 6-78
Gas spring inspection . . . 6-76
Grease points . . . 6-10
Hydraulic circuit . . . 6-39
Levels . . . 6-22
Machine inspection and cleaning . . . 6-66

Plastic and resin parts . . . 6-67
Protecting the Electrical/Electronic Systems During Charging or Welding . . . 6-65
Radiator and coolers . . . 6-60
Releasing pressure in the hydraulic system . . . 6-37
Replacing a backhoe bucket . . . 6-69
Replacing a tooth on a backhoe bucket . . . 6-68
Starter motor . . . 6-84
Swing reduction gear . . . 6-51
Tooth tip wear limits on the backhoe bucket . . . 6-67
Torque specifications . . . 6-77
Track rollers and idler wheels . . . 6-59
Tracks . . . 6-56
Travel reduction gears . . . 6-54

LEFT-HAND SIDE CONTROLS . . . 3-49
Coat hanger hook . . . 3-57
Emergency exit hammer . . . 3-56
Function cancellation lever . . . 3-51
Heating, ventilation or air-conditioning control . . . 3-52
Left-hand control arm . . . 3-49
Magazine rack . . . 3-57
Sliding windows on door . . . 3-57
Tool quick coupler locking and unlocking control switch (Optional) . . . 3-56

MAINTENANCE . . . 6-1
Adjustment of engine valve rocker clearances . . . 6-63
Air conditioning . . . 6-73
Air filter . . . 6-48
Alternator . . . 6-84
Basic instructions . . . 6-1
Batteries . . . 6-80
Bulb replacement . . . 6-85
Cab protection (ROPS and FOPS) (optional) . . . 6-66
Checking the cylinders for leaks . . . 6-67
Checking the machine settings . . . 6-66
Checking the opening of the quick coupler locking hook (optional) . . . 6-71
Cooling system . . . 6-27
Diesel particulate diffuser (DPD) . . . 6-76
Engine . . . 6-24
Fan and alternator drive belt . . . 6-62
Fire extinguisher (not supplied) . . . 6-64
Fluid capacities and lubricant specifications . . . 6-9
Fluids, fuels and lubricants . . . 6-5
Fuel system . . . 6-30
Fuel tank filter . . . 6-64
Fuses . . . 6-78
Gas spring inspection . . . 6-76
Grease points . . . 6-10
Hydraulic circuit . . . 6-39
Levels . . . 6-22
Machine inspection and cleaning . . . 6-66
Maintenance Chart . . . 6-87
Periodic checks . . . 6-91
Plastic and resin parts . . . 6-67
Preparing for storage . . . 6-90
Protecting the Electrical/Electronic Systems During Charging or Welding . . . 6-65
Radiator and coolers . . . 6-60
Releasing pressure in the hydraulic system . . . 6-37
Replacing a backhoe bucket . . . 6-69
Replacing a tooth on a backhoe bucket . . . 6-68
Starter motor . . . 6-84
Starting up after storage . . . 6-92
Swing reduction gear . . . 6-51
Tooth tip wear limits on the backhoe bucket . . . 6-67

Torque specifications . . . 6-77
Track rollers and idler wheels . . . 6-59
Tracks . . . 6-56
Travel reduction gears . . . 6-54

MAINTENANCE CHART . . . 6-87
Maintenance Chart . . . 6-87

MOVING THE UNIT . . . 4-15
Adjustment and mounting of rear view mirrors . . . 4-30
Auxiliary hydraulic circuits . . . 4-34
Handling the machine . . . 4-18
Load handling . . . 4-20
Lowering the attachment in the event of a failure . . . 4-29
Machine travel . . . 4-15
Operating the machine . . . 4-22
Optional hand control levers configuration . . . 4-45
Quick coupler (optional) . . . 4-24

OPERATING INSTRUCTIONS . . . 4-1
Adjustment and mounting of rear view mirrors . . . 4-30
Anti-theft protection . . . 4-4
Auxiliary hydraulic circuits . . . 4-34
Bringing the machine up to operating temperature . . . 4-9
Cab - Operating . . . 4-1
Cab - Running-in Procedure . . . 4-3
Engine operation . . . 4-10
Handling the machine . . . 4-18
Load handling . . . 4-20
Lowering the attachment in the event of a failure . . . 4-29
Machine operation . . . 4-12
Machine travel . . . 4-15
Operating the machine . . . 4-22
Operating the machine in hot or cold weather . . . 4-11
Optional hand control levers configuration . . . 4-45
Parking the machine . . . 4-46
Quick coupler (optional) . . . 4-24
Starting the engine . . . 4-7
Stopping the engine . . . 4-14

OPERATOR'S SEAT . . . 3-5
Air suspension seat adjustments . . . 3-5

OVERHEAD CONTROLS . . . 3-65
Cab internal lighting . . . 3-66
Roof curtain . . . 3-65
Roof hatch . . . 3-65
Sun shield (optional) . . . 3-66

PARKING THE UNIT . . . 4-46
Parking the machine . . . 4-46

REARWARD CONTROLS . . . 3-64
Fuse box . . . 3-64

RIGHT-HAND SIDE CONTROLS . . . 3-58
Cab radio . . . 3-60
Cup holder . . . 3-62
Dozer blade control lever (standard machine only) . . . 3-63
Right-hand console . . . 3-62
Right-hand control arm . . . 3-58

SAFETY INFORMATION . . . 2-1
Hand signals . . . 2-28

Safety decals 2-8
Safety rules 2-1

SHIPPING TRANSPORT 5-1
Tie downs for shipping — Procedure 5-6
Towing 5-9
Transport setting for long arm machine 5-8
Transporting the machine 5-1

SPECIFICATIONS 8-1
Dimension 8-6
General specification 8-1
Noise level 8-4
Weight 8-5

STARTING THE UNIT 4-4
Anti-theft protection 4-4
Bringing the machine up to operating temperature 4-9
Engine operation 4-10
Machine operation 4-12
Operating the machine in hot or cold weather 4-11
Starting the engine 4-7

STOPPING THE UNIT 4-14
Stopping the engine 4-14

STORAGE 6-90
Periodic checks 6-91
Preparing for storage 6-90
Starting up after storage 6-92

TRANSPORT OPERATIONS 5-1
Tie downs for shipping — Procedure 5-6
Towing 5-9
Transport setting for long arm machine 5-8
Transporting the machine 5-1

TROUBLESHOOTING 7-1
Engine troubleshooting 7-1

Dealer's stamp

CNH Europe Holding S.A. reserves the right to make improvements in design and changes in specifications at any time without notice and without incurring any obligation to install them on units previously sold. Specifications, descriptions, and illustrative material herein are as accurate as known at time of publication, but are subject to change without notice.

Availability of some models and equipment builds varies according to the country in which the equipment is being used. For exact information about any particular product, please consult your Case dealer.

CASE CONSTRUCTION

Copyright © 2013 CNH Europe Holding S.A. All Rights Reserved.
Case is a registered trademark of CNH Europe Holding S.A.
Boulevard Royal, 24 L-2449 Luxembourg.