Operating and Maintenance Manual

We Know Compaction

MC 85
MC 85 US
MC 85 CCD
MC 85 US CCD

0142410
0142411
0142412
0142413
0142414

Before starting

There is a rating plate identifying the machine including designation, type, serial numbers, year of construction, mass, and rated power.
Note down this information so that you can recreate the rating plate should the plate be lost

1 Designation

.....

2 Type

.....

3 Serial number

.....

4 year of construction

.....

5 Mass [kg]

.....

6 Rated power [kW]

.....

Device Component Label

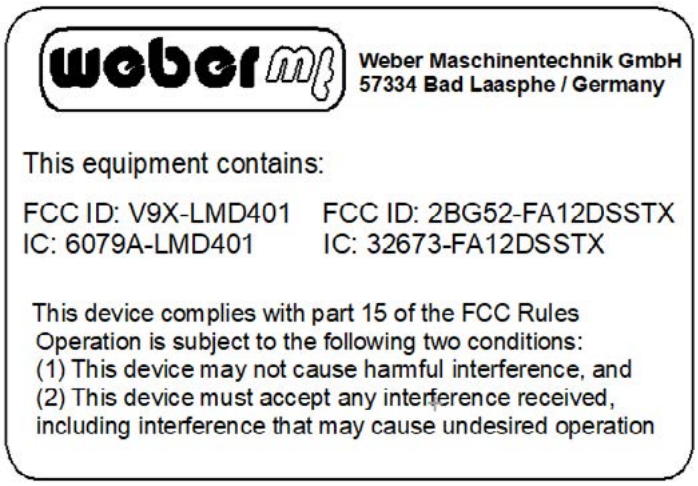

Contents

1. Introduction **4**
2. Description **5**
3. Technical data **6**
4. Safety **8**
4.1. Information and safety stickers 14
5. Operation **17**
5.1. Prior to initial use 17
5.2. Operating positions on the machine 18
5.3. The radio remote control 19
5.4. Before starting work 21
5.5. Testing the safety devices 22
5.6. Operation 23
5.7. The vibration system 24
5.8. Switching off the engine 24
6. Notices on operation **25**
6.1. Position of the operator 25
6.2. Shut-off devices 26
6.3. The battery of the radio remote control 28
6.4. Safe driving 29
6.5. Messages on the radio remote control 31
6.6. The Compatrol compaction control system 33
7. Transport **35**
7.1. Lifting the machine 35
7.2. Lashing on the transport vehicle 35
7.3. Strapping down on the transport vehicle 35
8. Cleaning **36**
9. Storage **37**
10. Maintenance **38**
10.1. Maintenance overview **40**
10.2. Description of the maintenance operations **42**
10.2.1. Opening / closing the hood 42
10.2.2. Securing the articulated joint 42
10.2.3. Checking fluid levels 43
10.2.4. Changing the engine oil 45
10.2.5. Changing the engine oil filter 46
10.2.6. Cleaning / changing the air filter 47
10.2.7. Draining the fuel filter 48
10.2.8. Changing the fuel filter 49
10.2.9. Changing the hydraulic oil filter 50
10.2.10. Changing the hydraulic oil 51
10.2.11. Changing the exciter / drive oil 52
10.2.12. Checking / adjusting the fan V-belt 54
10.2.13. Changing the fan V-belt 55
10.2.14. Lubrication chart 56
10.3. Operating fluids and fill levels **57**
10.4. Final shutdown and disposal **58**
10.5 Hydraulic circuit diagram **60**
10.6. Fuse box **67**
11. Annex Documents - Declaration and Compliance Statements **68**

1. Introduction

This operating and maintenance manual is designed to make you familiar with your roller and enable you to maintain and use it for its intended purpose.
The safety and maintenance instructions provided in this manual will help avoid hazards, reduce repair and downtime costs and will increase the reliability and operational readiness of your roller. Follow these instructions precisely.

This operating and maintenance manual must always be kept at the implementation site of the roller and be available to the machine operator.

Turn to your Weber MT dealer if you require any additional information. Found on the last page of this manual is a QR code. Scan it to acquire the current contact addresses of all Weber MT branches.

You can obtain information on the assembled KUBOTA diesel engine and the associated operating and maintenance manual as well as the spare parts list from Weber MT.

You can obtain the current spare parts list of the machine in the WeberMT Service App or use the link below:

https://wenet.webermt.com/

2. Description

The machine

The machine is a radio-controlled, type MC 85 trench roller with articulated steering.
The machine is composed of two separate halves which are interlinked by a so-called articulated joint.

The front section houses two drums, an exciter, the diesel engine and the hydraulic pumps. The diesel engine powers the pumps used for the hydraulic system.
The rear section houses two drums, an exciter and the hydraulic and diesel tank.

The machine is controlled with a radio remote control.
All functions of the roller (drive, steer, vibrate) are controlled hydraulically. The parking brake engages automatically by spring force.

Located on the machine is a key switch that is used to activate the receiver on the machine.

The radio remote control

The machine is operated with the help of a radio remote control. Since controlling the machine from a safe distance, the operator is protected throughout operation. The operator can, for instance, remain in a position above the machine to monitor and control it while performing compacting operations in trenches.

The remote control furthermore comes with a safety shutdown system which will stop the movement of the machine if the operator holding the remote control moves closer than 2 meters to the machine or moves away from it farther than 20 meters.

The radio system transmits signals to two receiver antennas which are located below the hoods of the machine. Sent from the hand-held transmitter to the antennas, the radio signals control the machine. The machine can still be used as intended if only one antenna receives the signal transmitted by the remote control.

Even it multiple machines are used in narrow spaces, it is the responsibility of each operator to ensure no one is in the danger area of their own machine. The control will independently detect another machine operating in its vicinity and adjust its frequency accordingly. However, since it will not detect the near field range of another control, the operator is required to pay attention to other machine operators in the vicinity.

3. Technical data

	MC 85
Weight	
Dead weight [kg]	1618
Operating weight CECE [kg]	1628
Dimensions	
Overall length [mm]	2018
Height [mm]	1300
Drum width [cm]	39
Drum diameter [cm]	57
Axle base [cm]	105
Drive	
Engine manufacturer	Kubota
Type	D 1005
Performance at operating speed in accordance with ISO 3046-1 [kW]	14.3
Combustion process	4 T-diesel
Operating speed [1/min]	2600
Idle speed [1/min]	0
Cooling system	Water
Drive concept	Hydr.
Powered drums	4
Incline capacity, soil-dependent [%]	58
Tilted position, soil-dependent [%]	58
Operating brake	Hydrostat.
Parking brake	Spring-loaded
Drive speed	
Working motion forward / reverse [km/h]	1.4
Rapid motion forward / reverse [km/h]	3.1

3. Technical data

	MC 85
Vibration	
Vibrating drum	Front + Rear
Drive concept	Hydr.
Frequency [Hz]	42
Compaction force, high amplitude [kN]	73
Compaction force, low amplitude [kN]	36
Operation	
	Remotely operated
Noise emissions in accordance with 2000/14/EC	
Sound pressure level LPA [dB(A)]	107
Sound power level LWA [dB(A)]	109
Performance at operating speed in accordance with ISO 3046-1 [kW]	14.3

4. Safety

General

All safety instructions must be read and complied with, as non-compliance will result in

- Danger to life and limb of the user,
- Impairments to the machine or other property.

In addition to the operating manual, the accident-prevention regulations in the country where the appliance is used must be complied with.

Intended use

The roller should only be used in technically faultless condition, as intended, in a safety-conscious and hazard-conscious manner, and in compliance with the instructions in the operating manual. Malfunctions that impair safety must be eliminated without delay. The MC 85 roller is designed exclusively for the following operations:

- Compacting work during the construction of channels and pipes
- Structure backfilling
- Compacting operations during railroad and dam construction
- Compressing cohesive ground for the construction of trenches
- Compaction of substructures and foundations

The operator's work position is behind the machine.
If changing their position, the operator must keep in mind that the directions of the control levers only match the movements of the roller as seen from behind the roller.

Non-intended use

Unless used as intended, the machine involves a risk of personal injury and property damage. The machine is expressly not suitable for:

- Transporting people or material.
- Operation of the machine in non-compliance with the warnings provided on the machine and in the operating manual.
- Towing other machines or equipment.
- Travel over frozen subsurfaces.
- Travel over concrete or bituminous surfaces.
- Travel over sloping or unsound ground.
- Operation without visual contact.
- Use of the machine with non-operational protective fixtures.
- Operation of the machine in an explosive atmosphere.

The responsibility for any damage arising from non-intended use falls on the owner / operator rather than the manufacturer.

Residual risk

There is always an increased risk of accidents in the danger area of the machine.
Anyone close to the machine must be made aware of this risk to allow them to react promptly in the event of a malfunction by paying increased attention and to minimize the risk of injury.

Requirements on the operator

This soil compactor may only be driven by suitable operators who are of legal age. They must be instructed on how to operate the machine by the owner or by the owner's assigned personnel. The operator must comply with traffic regulations. If instructions that affect safety are given by the owner or third parties, then the operator must be authorized to reject these instructions. Maintenance and repairs require specific qualifications. These operations may only be carried out by trained professionals. The machine must not be operated by children.

Personal protective equipment

Personal protective equipment consisting of

– protective goggles,
– hearing protection,
– work shoes or boots with toe guard

must be worn during operation and the execution of maintenance on the machine.

Danger areas

The immediate danger area is in a two-meter perimeter around the machine.
This area is off-limits to both the operator and third parties while the machine is in operation.

Third parties in particular also need to use caution outside of the immediate danger area as they will not be detected by the near-field shutdown system of the remote control. The operator may steer the machine in an unexpected direction and hit third parties.

If the machine is operated close to edges or terraces, staying in the area below the machine is forbidden as the machine may fall down.

Safety devices and protective fixtures

To keep the operator protected, the machine is equipped with a near-field shutdown system. It prevents the operator from being hit or run over by the machine themselves.
Its operation is described in the section "Shut-off devices".

Besides the near-field shutdown system, the machine is also equipped with a remote shutdown system designed to protect third parties. It keeps the operator from operating the machine beyond its range (20 meters).
Its operation is described in the section "Shut-off devices".

These safety devices are intended to protect the operator and third parties and must not be modified or disabled.

Every day before work the safety devices must be checked for proper operation following the section "Testing the safety devices".

Spare parts, changes and conversions

Changes and conversions are prohibited unless made with original Weber MT spare parts. If the machine is modified with other accessories without the approval of Weber MT, the manufacturer will not assume liability for any resulting personal injury or property damage.

All maintenance and repairs must be carried out with original Weber MT spare parts. Untested spare parts may affect the reliability and safety of the machine.

Before starting the machine

The machine must not be started unless the lock on the articulated joint has been removed and stowed in the rear section of the machine. If both halves of the machine are connected by the lock, the operator will not be able to steer the machine.

The machine must not be started while maintenance or repairs are pending.

The machine must not be started unless the operator is wearing the required personal protective equipment.

The machine must not be started if loose objects have been placed on top of it.

The machine must not be started unless the hoods have been closed.

The machine must not be started unless all safety devices have been properly attached.

Start-up procedure

It is forbidden to disperse any sprays or other agents into the air intake while the machine is starting up.
They may lead to overheating in the combustion chamber.

Before the machine can start, drive and steering lever must be in the neutral position and the vibration system must be switched off. This prevents the machine from starting to move unexpectedly during the start-up procedure.

Immediately following the start-up procedure, all control indicators on the display of the remote control must go out. There may be a technical defect if a warning remains. In this case, the engine must be switched off and the cause must be identified and rectified. There is danger of suffocation in the immediate vicinity of the machine if the operator starts up the machine in closed rooms or in trenches. Operating the machine in closed rooms is prohibited. An adequate supply of air must be ensured before the machine is started.

During operation

To avoid personal injury and property damage, the operator must monitor the entire surroundings at all times. It will not suffice to only monitor the immediate danger area as the machine may tip suddenly and unexpectedly on account of potential landslides or other types of unforeseen changes in the ground.

The occurrence of unusual noises may point to a defect. In this case, stop and machine and shut it down. Identify and rectify the cause.

Special caution must be used in the vicinity of pits, embankments or similar types of terraces. Before the machine is driven onto such places, it must be ensured that the ground can support the weight of the machine.
The machine must not be driven up inclines unless they are smaller than the maximum incline capacity of the machine. Before driving up inclines, the operator must ensure that the subsurface is suitable and cannot cause the machine to skid.
For more information on how to drive up inclines, refer to the section “Safe driving”.

As a general rule, only drive up and down inclines parallel with the slope. If driving up crosswise to the slope regardless, make sure not to exceed the maximum tilt angle. This angle was calculated on a straight and level surface with the machine at a standstill.
Using the machine with the vibration, steering or abrupt driving maneuvers and the conditions of the ground may reduce the tilt angle dramatically and cause the machine to tip over.

Parking the machine

Park the machine on a level subsurface with sufficient bearing capacity.

When leaving the machine, the operator must switch off the machine, pull the key from the key switch, and secure the machine against unauthorized use.

Parked machines presenting an obstacle must be secured in accordance with statutory regulations, particularly in the area of public traffic surfaces.

Engine and exhaust heat up during operation and can cause burns on contact. Therefore, do not touch the components during operation or shortly after the engine was switched off.

Fueling the machine

Spilled fuel may ignite and has a negative impact on the environment. Therefore, wipe up spilled fuel and make sure the gas cap is firmly tightened after fueling.

Fuel vapors are easily flammable. Do not smoke and keep away from open fire while refueling the machine.
The engine must not be fueled unless it has been switched off.

Maintenance

The roller must be inspected in accordance with the corresponding implementation conditions and operating conditions to ensure its operationally safe status. This inspection should be performed as needed by an expert – however, no less than once a year or every 150 operating hours. The findings of the inspection must be stored in writing until the time of the next inspection.

Maintenance and repairs must not be performed unless all drives are at a standstill and the articulated joint has been secured. Deviations from this precaution are not permissible unless warranted for the completion of the work. The roller must be secured against rolling away before work commences.

Prior to work on unsecured parts of the electrical system, the combustion engine must be safeguarded against unintentional start. This requires that the electrical connection to the battery or the starter be interrupted.

Following the conclusion of all maintenance and repairs, all protective fixtures must be refitted and placed back into operation.

Discharged operating fluids must be collected and stored in suitable containers. Disposal in accordance with environmental protection regulations.

Use clear water for cleaning. Do not use flammable solvents. The vapors of the solvents may ignite upon contact with hot components or other sparks.

The radiator cover cap may only be opened when the radiator is cold. Hot coolant is pressurized. Opening the radiator while it is still hot can lead to severe burns.

Before starting the machine after maintenance operations, make sure that all loose parts (screws, tool, etc.) have been removed from the machine. They be drawn in by moving parts.

The entire machine must be kept clean. The stickers must always be clearly legible. Damaged stickers must be replaced.

Cleaning work

Cleaning with a high-pressure cleaner is only allowed in the bottom section of the machine. The top section of the machine must be cleaned with a weaker jet of water.

To prevent environmental pollution, cleaning tasks may only be executed in areas that are suitable and have been approved for this purpose (e.g. drain with oil separator).

Safe handling of combustion engines

Combustion engines pose a particular risk during operation.
Their exhaust emissions contain carbon monoxide, a colorless and odorless gas that is extremely hazardous, which, if inhaled even briefly, can cause unconsciousness and death.
Therefore, never inhale the exhaust gas.

When operating the machine in trenches or poorly ventilated locations, the operator must not be in the immediate vicinity of the machine.
The operator must assume a place in a well-ventilated location.

Exercise particular caution when operating the machine in the immediate vicinity of people or animals.

Do not smoke during operation.

Safety instructions and warnings

A variety of safety instructions and warnings are used throughout this operating manual.
The following explains the meaning of signal words and symbols.

ATTENTION	ATTENTION warns of the danger of material damage.
⚠ **CAUTION**	CAUTION warns of the danger of slight injury.
⚠ **WARNING**	WARNING warns of a danger that may lead to death or serious injury.
⚠ **DANGER**	DANGER warns of a danger that will lead to death or serious injury unless avoided.

The information symbol provides supplemental information on the operation of the machine and points to complementary technical information.

California Proposition 65 Warning

WARNING: Using this product can expose you to chemicals including diesel engine exhaust, which are known to the state of california to cause cancer and birth defects or other reproducive harm. For more information go to www.P65Warnings.ca.gov.

4.1. Information and safety stickers

	Sticker	Meaning
1	**Alle Schraubenverbindungen ständig auf festen Sitz überwachen!** -Besonders nach dem ersten Einsatz- **Continuously check all screwed connections for firm seating** -particularly after initial employment- **Controler continuellement tous les raccords a vis pour un siege ferme** -particullerement apres l'emploi initial-	All threaded unions must be checked for firm seat on a regular basis and, particularly, after initial use.
2		The fuel tank may only be fueled with diesel.
3		Wear ear protection.
4	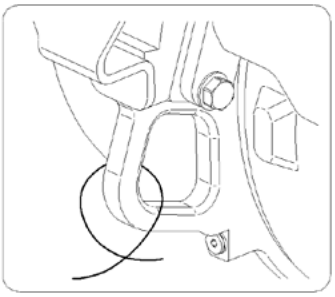	Lashing eyelet for securing during transport.
5		To lash the machine down, place the strap across the drums as shown. To keep the scrapers from bending, they need to be supported as shown.

4.1. Information and safety stickers

	Sticker	Meaning
6	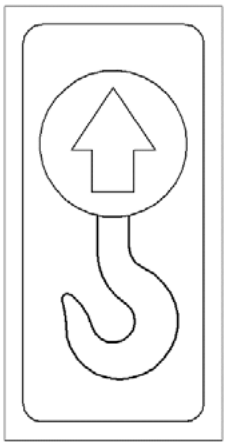	Lifting ring for lifting the machine.
7	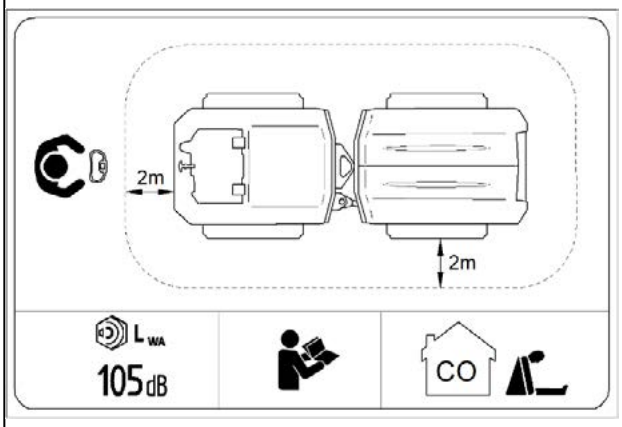	– Near-field shutdown in a perimeter of 2 m around the machine. – Sound power level 105 dB (A). – Read the operating manual. – Danger of suffocation when exhaust gas is inhaled or during operation in closed rooms.
8	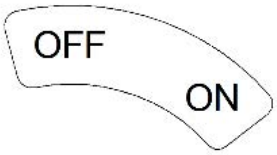	On and Off positions of the key switch.
9	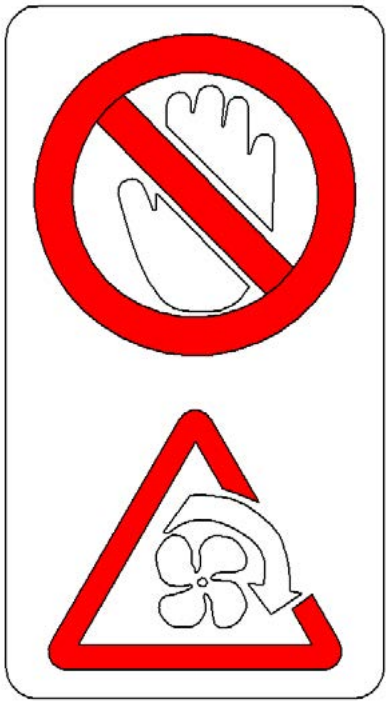	Entanglement hazard in the area of the fan. Reaching into the area of the fan or the V-belt is forbidden while the engine is running.

4.1. Information and safety stickers

	Sticker	Meaning
10		Danger of crushing injuries to the hands while closing the hoods.
11		Crushing hazard in the area of the articulated joint.
12		Risk of burns at the hot exhaust.
13	HYDRAULIC OIL	This tank may only be filled with hydraulic oil.
14	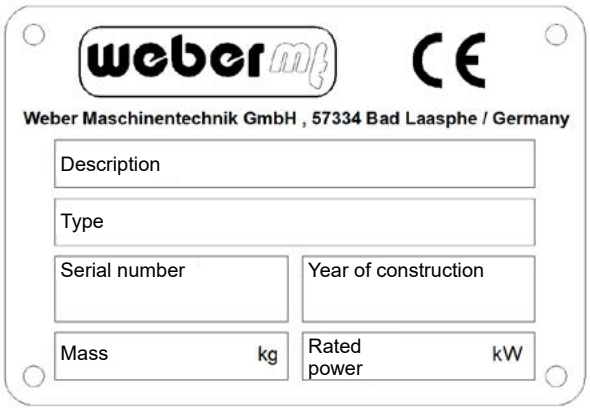	Rating plate identifying the machine including designation, type, serial numbers, year of construction, mass, and rated power. Note down this information so that you can recreate the rating plate should the plate be lost.

5. Operation

5.1. Prior to initial use

Preparing the machine for initial use

- ▶ Remove all packaging material.
- ▶ Check all components for visible damage.
  Do not start the machine if detecting visible damage.
  Contact the responsible dealer.
- ▶ Check if the shipment of the machine and its components is complete.
- ▶ Check the fill level of the operating fluids and top off if necessary.
- ▶ Set up the machine at its place of use.
- ▶ Connect the negative pole of the battery and tighten the pole terminal firmly.
- ▶ Check the voltage of the battery and charge it if necessary before starting the machine for the first time.

5.2. Operating positions on the machine

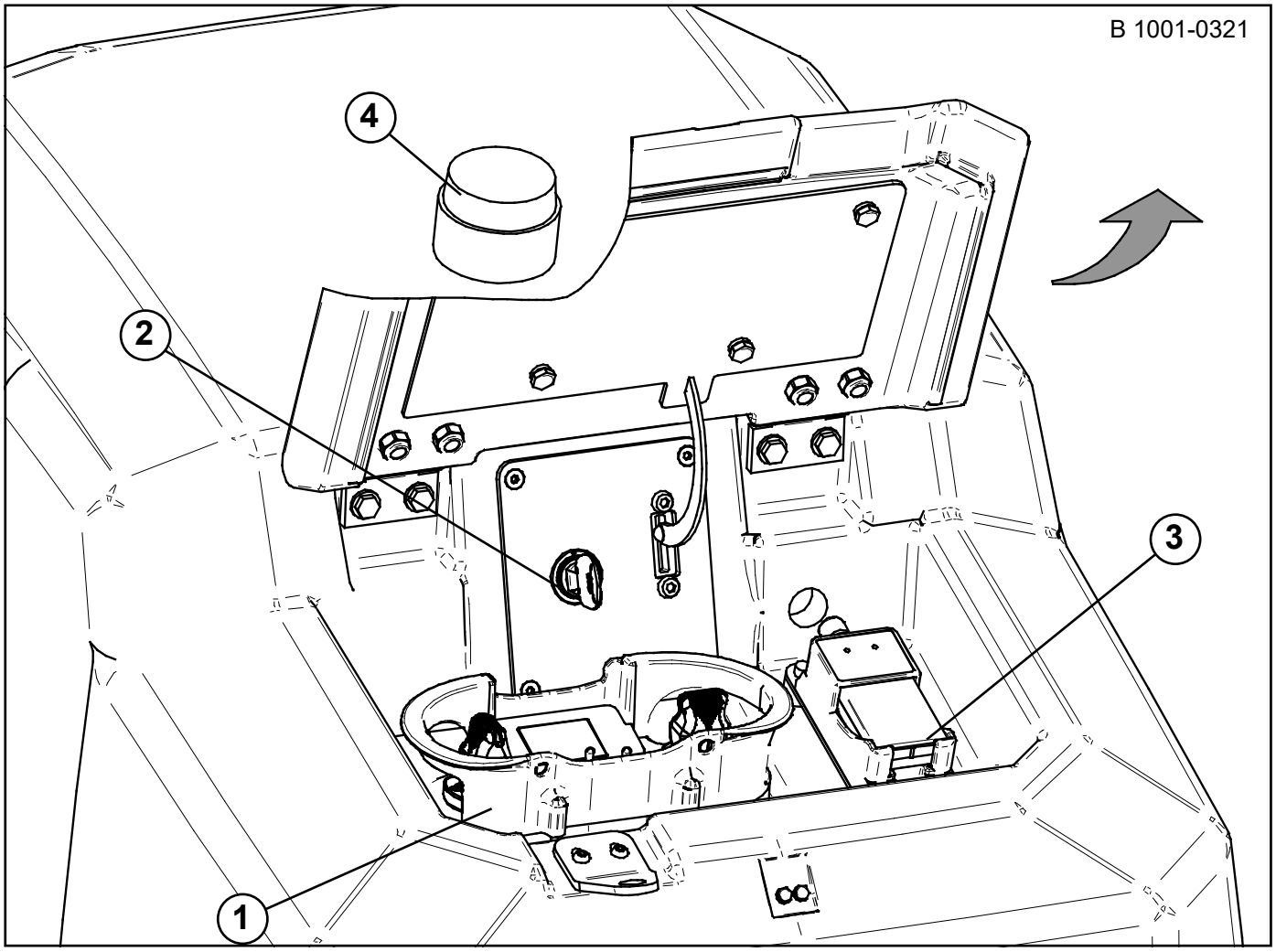

1 The radio remote control

The radio remote control is used to control the machine. It is explained in more retail in the section “The radio remote control”.

2 The key switch

The key switch is used to switch the power supply to the machine on or off.

▶ Switch in position “I” (ON)
✓ Power is switched on.
✓ The warning light (4) flashes.

▶ Switch in position “0” (OFF)
✓ Power is switched off.
✓ The warning light goes out

3 The charger for the radio remote control

The charger is used to charge the battery of the radio remote control. It is described in more detail in the section “Replacing and charging the battery”.

4 The warning light

The warning light indicates that the power supply to the machine is switched on.
The machine is ready to receive signals from the radio remote control.

5.3. The radio remote control

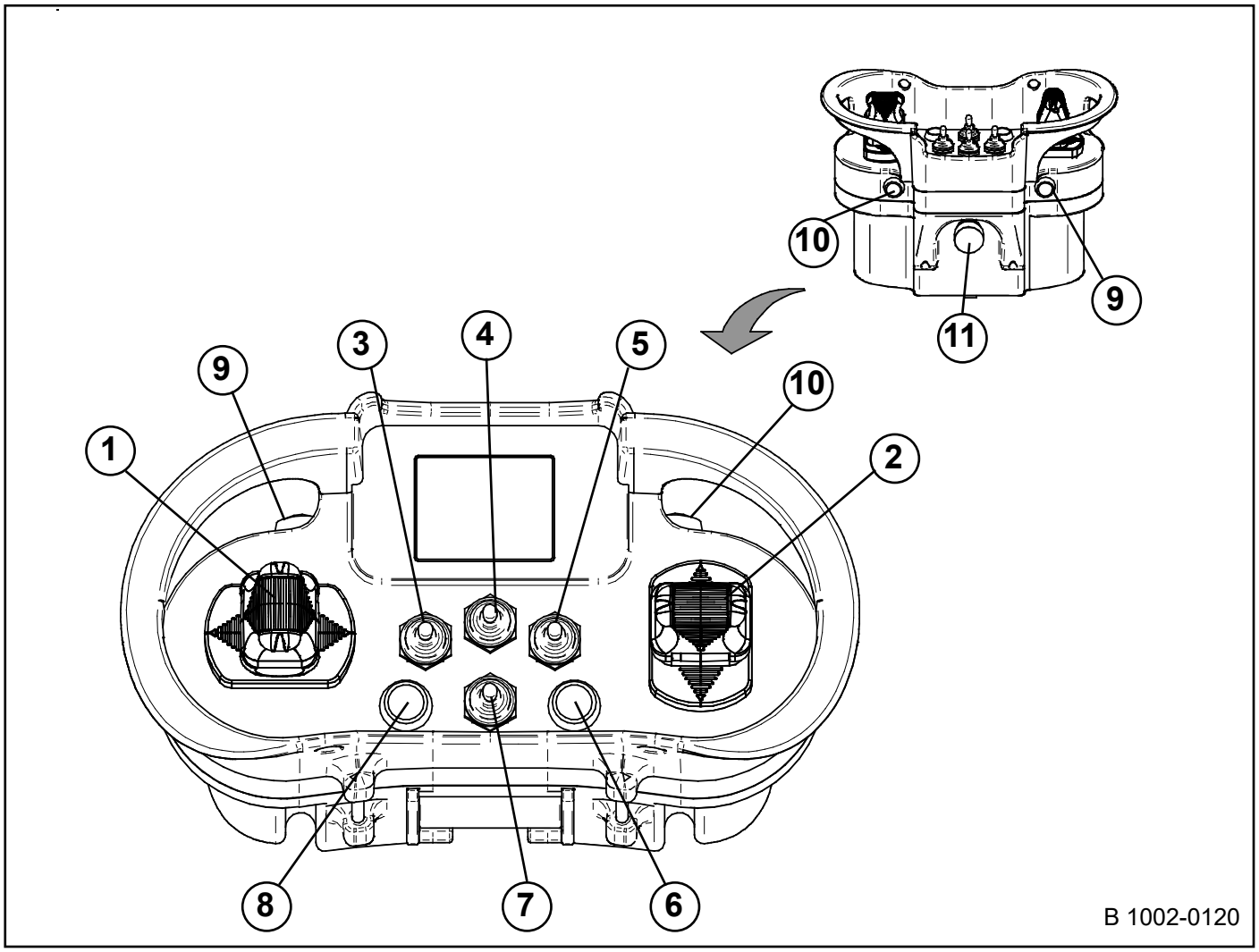

1 The steering lever

The steering lever steers the machine in the desired direction.

▶ Deflect to the left
✓ The machine steers to the left.

▶ Deflect to the right
✓ The machine steers to the right.

2 The drive lever

The drive lever controls the forward and backward movement of the machine.

▶ Deflect to the front
✓ The machine moves forward.

▶ Deflect to the back
✓ The machine moves backward.

3 The vibration force selector switch

The vibration force selector switch sets the vibration force of the machine.

▶ Deflect to the front
✓ The strong vibration has been selected.

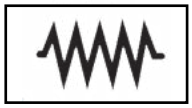

▶ Deflect to the back
✓ The weak vibration has been selected.

4 The vibration selector switch

The vibration selector switch switches the vibration system on or off. It has three positions.

▶ Deflect to the front
✓ The vibration is turned on permanently.

▶ Set to middle position
✓ Automatic vibration has been selected. The vibration is activated by driving and steering commands and stops shortly after the last driving and steering command.

▶ Deflect to the back
✓ The vibration is switched off.

5 The engine speed selector switch

The engine speed selector switch switches ECO mode on or off.

▶ Deflect to the front
✓ ECO mode is active. The machine increases the engine speed during use automatically and lowers it to idle speed approx. 20 seconds after the last driving and steering command.

▶ Deflect to the back
✓ The engine runs at idle speed. The machine can be maneuvered slowly; vibration and rapid motion are not available.

6 The pushbutton Horn

The pushbutton actuates the horn. It can be used to warn anyone of dangerous situations who is in the vicinity of the machine.

7 Selector switch Remote control and machine off

The selector switch powers off the remote control and switches the engine of the machine off.

▶ Deflect to the front “1”
✓ The remote control is switched on and can transmit commands.

▶ Deflect to the back “2”
✓ The remote control is switched off. If the engine is running, it will be switched off as well.

8 The pushbutton Engine start

The pushbutton starts the engine.

▶ Press and hold the button until the engine starts running.
▶ Another press will stop the engine.

9 / 10 The pushbutton Rapid motion

The pushbutton activates rapid motion, increasing the travel speed of the machine.
Rapid motion is not available unless the vibration is deactivated.

11 The Emergency Stop switch

The Emergency Stop switch is used to switch off the machine in dangerous situations. A press of this button will stop the engine immediately and power off the radio remote control and the machine.

5.4. Before starting work

Perform the following tasks before starting to work in order to prevent failures or excessive wear.

Visual inspections

- ▶ Engine and cooling system for leaks
- ▶ Hydraulic tank and lines for leaks
- ▶ Fuel system for leaks
- ▶ Rubber buffers for crack formation
- ▶ Plug connections of the power grid for firm seat
- ▶ Other damage

Function tests

- ▶ Emergency stop system of the radio remote control
- ▶ Near-field shutdown system of the radio remote control

Check and, if necessary, correct the fill levels

- ▶ Engine oil
- ▶ Hydraulic oil
- ▶ Fuel
- ▶ Coolant

Other inspections

- ▶ Check all threaded unions for firm seat
- ▶ Verify compliance with the maintenance schedule
- ▶ Check and, if necessary, empty the water separator of the oil filter

5.5. Testing the safety devices

Every day before placing the machine into operation and after extended work breaks, the operation of the near-field shutdown system of the radio remote control and of the emergency stop switch must be tested.

Starting the engine

▶ Take the radio remote control out of its holder in the rear hood and safely place the carrying strap around you.
▶ Check the position of the following switches:
- Remote control on/off: off
- Vibration: off
- Steering joysticks: neutral position

▶ Turn the key switch on the machine to the “I” (ON) position.
✓ The power is switched on, and the roller is ready to start.
✓ The warning light flashes.
▶ Switch on the radio remote control with the corresponding selector switch.
▶ Press and hold the pushbutton “Engine start” until the engine starts running.
✓ The machine begins with the start-up procedure.
✓ The engine may glow for a few moments depending on the temperature.
▶ Allow the engine to warm up at idle speed for a few moments before activating other functions (e.g. vibration or ECO mode).
✓ The machine is ready for operation.

After igniting, the engine will run at full throttle for approx. 0.5 seconds. Only after that time will the remote control indicate any errors of the machine.

Testing the near-field shutdown system

▶ Start the engine.
▶ Stand at least 5m (=16 ft) behind the machine.
▶ Drive toward you using the operating speed.
To use the operating speed:
- select the ECO-Mode
- Navigate the machine with the joysticks

✓ The movement is stopped once you step into the near field of the machine.
✓ The display of the remote control indicates in which area the minimum distance was not observed.
▶ Step out of the safety area OR
▶ Use the drive lever to steer in the opposite direction.
✓ The machine can be driven again.

Testing the emergency stop switch

▶ Start the engine.
▶ Drive forward at operating speed.
▶ Press the emergency stop switch.
✓ The machine stops moving and switches off the diesel engine; the remote control is powered off.
▶ Set the ignition switch on the machine to the “0” (OFF) position.
▶ Unlock the emergency stop switch on the remote control by turning it in arrow direction.
✓ The machine can be started again.

If the safety devices are not operational, stop working with the machine immediately and promptly rectify the cause.
For this purpose, contact Weber MT’s service organization.

⚠ WARNING

Risk of injury for unauthorized persons in the danger area!
The near-field shutdown system provides protection only to the operator, not to third parties!

- ▶ Always ensure that everyone keeps at a safety distance of at least 2 meters around the machine.
- ▶ Sound the horn if necessary.
- ▶ Do not resume operation until everyone has left the danger area.

⚠ WARNING

The directional information on the remote control only applies if the operator is located behind the machine. If the operator changes their position, the directional information may change as well.
There is risk of severe injury when becoming crushed between the machine and other objects or walls.

- ▶ Become familiar with the control.
- ▶ Observe the section “Position of the operator”.
- ▶ Stay behind the machine during operation whenever possible.
- ▶ Be aware of your surroundings.

Driving at operating speed

When traveling at operating speed (up to 1.4 km/h), the machine can drive, steer and vibrate.

- ▶ Select ECO mode using the “Engine speed” selector switch.
- ▶ Move the machine using driving and steering commands.
- ▶ Activate the vibration as needed.

Driving at rapid motion

When traveling at rapid motion (up to 3.1 km/h), the machine can drive and steer.
Rapid motion is not available with the vibration switched on.

- ▶ Select ECO mode using the “Engine speed” selector switch.
- ▶ Move the machine using driving and steering commands.
- ▶ Press one of the two “Rapid motion” pushbuttons as well.

Slow maneuvering

To allow for precise maneuvering, the machine can also drive with the engine running at idle speed.
The vibration is not available in idle speed mode.

- ▶ Select idle speed using the “Engine speed” selector switch.
- ▶ Move the machine using driving and steering commands.

5.7. The vibration system

Selecting the vibration force

The “Vibration force” selector switch makes it possible to choose between a strong and a weak vibration force.
If the vibration force is changed with the vibration system running, the change will take affect after a safety period of 4 seconds in order to prevent damage to the machine.

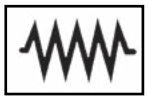

Weak vibration

Strong vibration

Automatic vibration

The machine is equipped with an automatic vibration system.
If selected, the vibration comes on automatically when the machine is driven or steered. The vibration stops automatically after the last driving or steering command.

Permanent vibration

If permanent vibration has been selected, the machine will vibrate even when not receiving a driving or steering command. To prevent damage to the machine, the vibration stops approx. 20 seconds after the last driving or steering command.

5.8. Switching off the engine

- ▶ Switch the vibration off using the Vibration selector switch.
- ▶ Set idle speed using the Engine speed selector switch.
- ▶ Allow the engine to cool off at idle speed for a few moments.
- ▶ Switch off engine and radio remote control using the selector switch “Remote control and machine off”.
- ✓ The engine is switched off.
- ▶ Set the key switch on the machine to the “0” (OFF) position.
- ✓ The machine is powered off.
- ✓ The warning light goes out.
- ▶ Stow the radio remote control in the designated compartment found in the rear hood.
- ▶ Secure the machine against unauthorized use.

Failure to switch off the power after work has been concluded may drain the starter battery.
Therefore, always set the key switch to the “0” (OFF) position after work has been concluded.

The machine has a brake with which the machine can be secured against unintentional rolling when switched off. This brake is preloaded by a spring and automatically released by executing a driving or steering command. It is activated automatically during extended work interruptions without a driving or steering command

6. Notices on operation

6.1. Position of the operator

The switches on the radio remote control are arranged in such a way that they map the movements of the machine when the operator is positioned behind the machine.
This means, for instance, that the machine will move away from the operator when the drive lever is deflected to the front. When the steering lever is deflected to the right, the machine will move to the right. The directional information only applies if the operator is positioned behind the machine.

If changing their position, the operator must keep in mind that the directional information of the control levers will no longer match the travel direction of the machine.

If the operator stands in front of the machine, the machine will move in the opposite direction of the driving and steering commands given. If, for instance, the machine moves toward the operator, the drive lever is deflected to the front. When the steering lever is deflected to the left, the machine will move to the right, as viewed by the operator. Do not use rapid motion unless the operator is positioned behind the machine.

⚠ WARNING

Risk of injury for unauthorized persons in the danger area!
The near-field shutdown system provides protection only to the operator, not to third parties!

- ▶ Always ensure that everyone keeps at a safety distance of at least 2 meters around the machine.
- ▶ Alert everyone in the vicinity of the machine of the danger.
- ▶ Sound the horn if necessary.
- ▶ Do not resume operation until everyone has left the danger area.

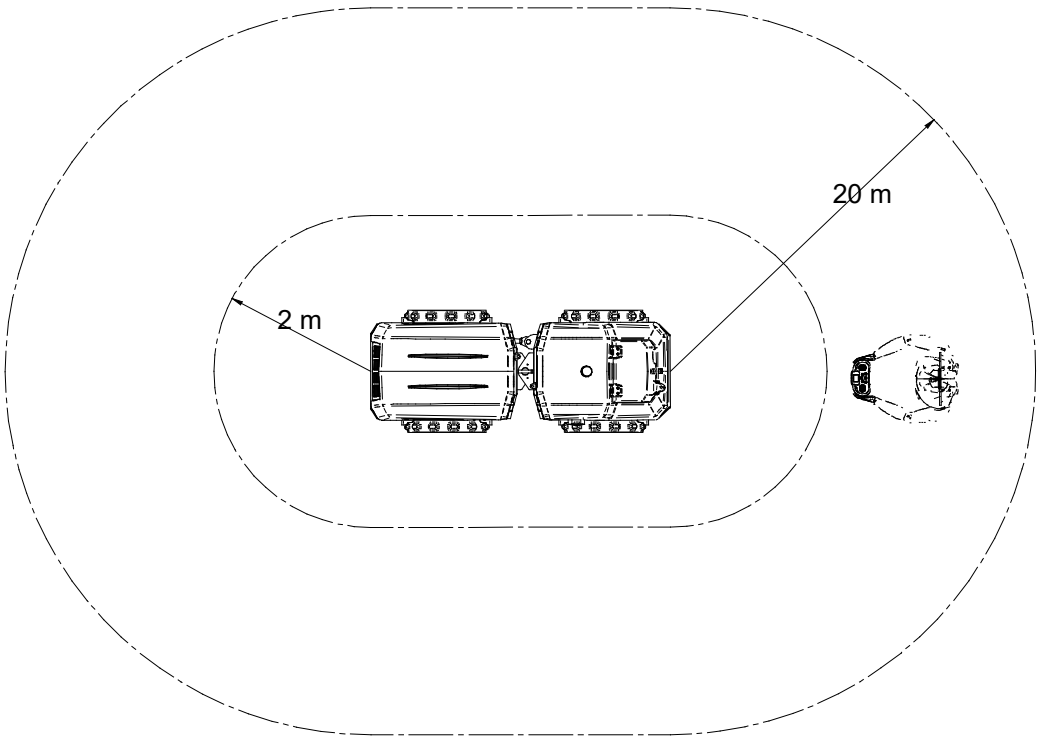

B 1006-0321

6.2. Shut-off devices

The near-field shutdown system

The radio system is equipped with a near-field shutdown system.
If the operator holding the radio remote control moves up to the machine closer than 2 meters, the machine will stop all driving and steering commands and the vibration. The display of the remote control indicates in which area the minimum distance was not observed.

In this case:

- ▶ Use the drive lever to steer in the opposite direction
  OR
- ▶ Set the drive lever to the neutral position and
- ▶ Step out of the safety area.
- ✓ Operation can resume.

The remote shutdown system

In addition to a near-field shutdown system, the machine also comes with a remote shutdown system. The remote shutdown system operates in two stages.
If the operator holding the radio remote control moves away from the machine farther than 20 meters, the machine will stop all driving and steering commands and the vibration. The display of the radio remote control shows the corresponding symbol (section 6.5).
In this case, proceed as described under “The near-field shutdown system” to resume operation.

Since the machine can also not receive an emergency stop command in the event of a radio signal disruption, the engine will be switched off if the radio signal is disrupted or if the distance to the machine is too great.

In this case:

- ▶ Step closer to the machine.
- ▶ If necessary, rectify the cause for the disruption of the signal.
- ▶ Restart the machine.

Rollover protection

If the machine tips over, use utmost care to prevent damage to the engine. If the machine tilts further than 45°, the engine switches off to ensure safety, and the start function is locked.
If lying on its side, the machine may allow oil to enter the combustion chamber of the engine. An attempt to start the machine may severely damage the engine

Measures if the machine has tipped over

ATTENTION!

Risk of environmental damage from escaping oil.

▶ Carry out repairs only in suitable rooms with an available oil separator.

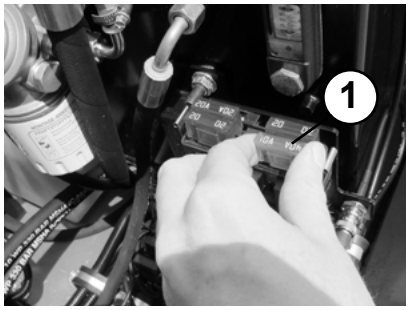

▶ Switch off the power supply using the key switch.

▶ Return the machine to an upright position as quickly as possible, but also in accordance with the safety guidelines.

▶ Check for external damage and replace any defective components.

▶ Check if the air filter insert has been contaminated with oil. Replace if necessary.

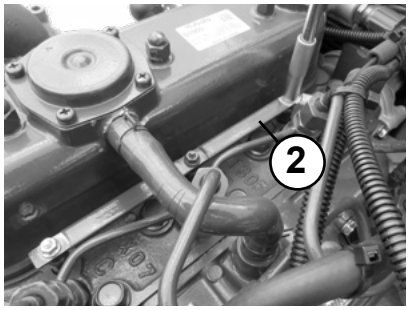

⚠CAUTION! Risk of material damage and minor injuries from electrical short circuits.

▶ Pull fuse F1A (pre-glow) (1) out of the fuse box. See also section 10.6. “Fuse assignment - fuse box”.

▶ Remove the bridge (2) of the glow plugs.

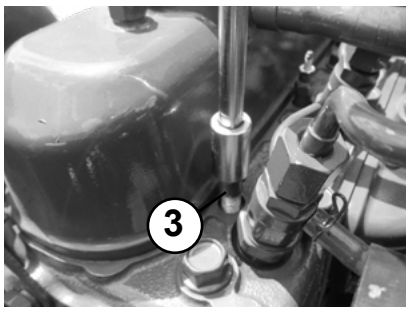

▶ Unscrew the glow plugs (3).

ATTENTION! The oil escapes under high pressure and squirts up high from the engine block.

▶ Manually rotate the engine further by two turns at the crankshaft. (Keep doing so until no more oil exits from the engine block.)

▶ Switch on the power supply using the key switch.

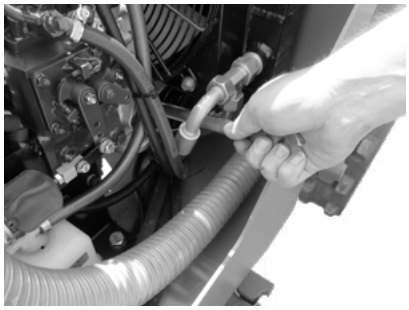

▶ Release the start lock of the radio remote control. Press the pushbutton for the horn to do so.

▶ Actuate the electric starter. To do so, press and hold the engine start pushbutton for approx. 3 seconds. (Hold it down until the combustion chamber is clear.)

▶ Switch off the power supply using the key switch.

▶ Screw in the glow plugs. The tightening torque is 12 Nm.

▶ Refit the bridge on the glow plugs.

▶ Insert fuse F1A (pre-glow).

▶ Check and, if necessary, correct the fluid levels, especially the engine oil level.

▶ Clean the entire machine.

✓ The machine is ready for operation again.

6.3. The battery of the radio remote control

The battery of the radio remote control is composed of three nickel-metal hydride cells (NiMH) with a total capacity of 2.2 Ah. It can be charged any time without any memory effect even if not drained completely. If fully drained, the battery will take approx. 9 hours to recharge. A fully charged battery will last for an operating time of approx. 12 hours. The operating time can be affected by a variety of factors such as cold ambient temperatures.

Battery charge condition

100% - 80%	40% - 20%
80% - 60%	20% - 0%
60% - 40%	Battery empty

Replacing the battery

- ▶ Push the battery up.
- ▶ Remove the battery towards the rear.
- ▶ Insert the new battery.

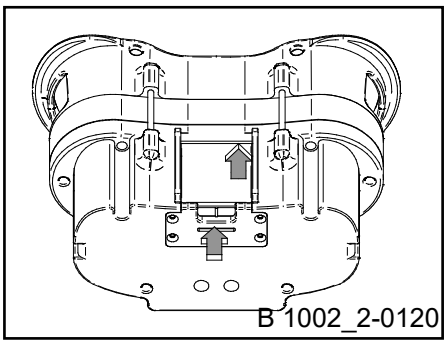

Charging the battery

The charger for the battery of the radio remote control is housed under the cover of the rear hood. It is constantly supplied with power even if the key switch has been set to the “0” (OFF) position.

- ▶ Clean the contacts on the battery and charger
- ▶ Insert the battery into the charger.
- ✓ The green LED flashes during the charging process.
- ✓ When the battery is fully charged, the green LED lights up permanently.
- ✓ If the LED is defective, the red LED lights up.

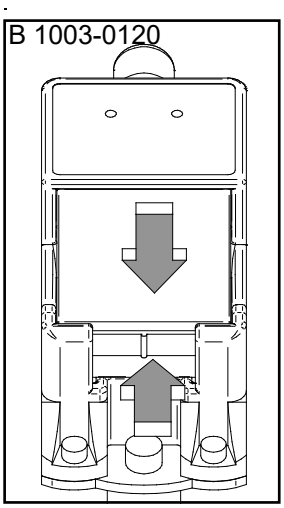

The charger is self-regulating and will detect when the battery is fully charged. It limits the charging current and prevents the battery from being overcharged. The battery can therefore be stored in the charger.

6.4. Safe driving

ATTENTION

Different environmental conditions and driving styles may affect driving stability.

▶ Observe the following information to prevent the machine from tipping over.

Surface conditions

Always pay attention to the operating surface during operation. If in doubt, check the bearing capacity of the ground first. To ensure safe operation, always adjust the speed, vibration and direction of travel to the environmental conditions.

Driving up inclines

To prevent injury and damage to the unit, use special caution when operating on inclines and hills.
As a general rule, only drive up and down inclines parallel with the slope. Never drive up inclines from the side to prevent overturning. It the machine tip overs, the engine will be switched off automatically to ensure safety.

The maximum incline capacity on a dry and solid subsurface is 58 % (30°). It only applies if the machine is moved at operating speed. Rapid motion and vibration reduce incline capacity and must be avoided when driving up inclines. When compacting on inclines, check if the vibration has a negative effect on incline capacity. If necessary, select a weaker vibration force or switch off the vibration system.

The tilt angle in lateral direction is 58 % (30°). It was calculated on a straight and level surface with the machine at a standstill. Rapid motion, steering angle and vibration as well as the condition of the operating surface may reduce the tilt angle dramatically.

If the machine is driven up an incline for more than 10 minutes, its incline capacity and the tilted position are reduced to 36 % (20°).

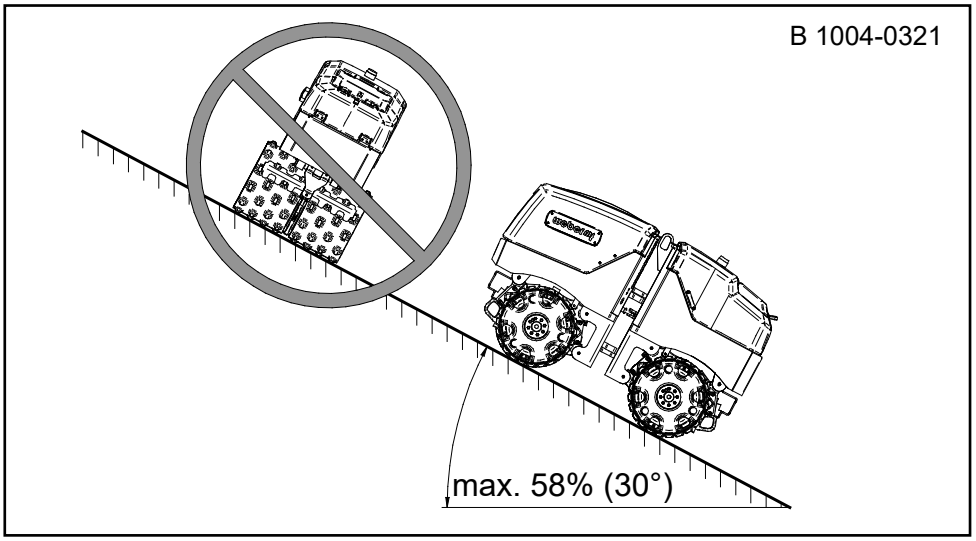

Steering on inclines

Avoid steering when operating on inclines.
The machine may tip over if the operator steers while driving up an incline.
If it is necessary to steer during operation on an incline, the operator must make sure to move the straight part of the machine towards the edge or the slope.

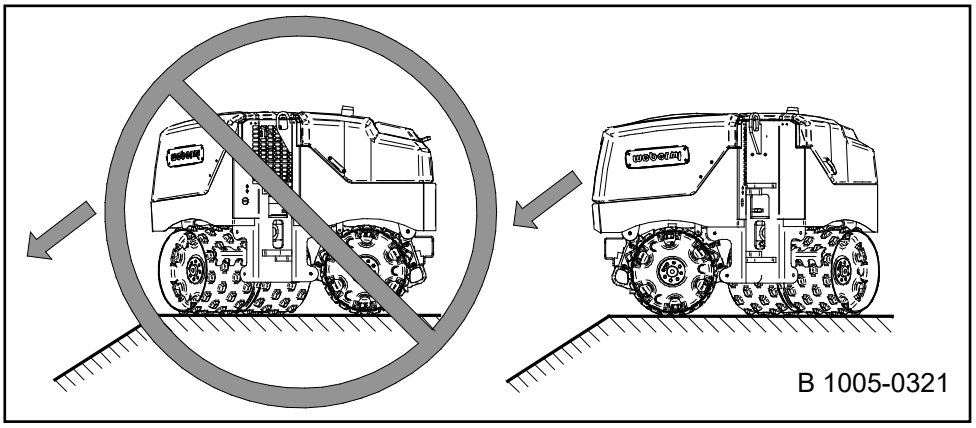

Working on edges

When the machine is used for compacting operations on the edges of an elevated surface, the edge below the machine may collapse suddenly and unexpectedly. If the machine protrudes beyond the edge, the machine may tip over unexpectedly.

- ▶ Use caution when driving over edges. If necessary, verify that the bearing capacity of the ground is sufficient to support the weight of the machine.
- ▶ Only drive at operating speed when operating close to the edge.
- ▶ If in doubt, shift the vibration system to the weaker stage or switch it off
- ▶ Keep a maximum portion of the drum on the top surface and watch the position of the drum closely.

Vibrating on compacted surfaces

When used on heavily compacted surfaces, the vibration may cause the drum to swing up and the machine to lose contact with the ground. This may cause the machine to skid on steep surfaces. Using the vibration on a heavily compacted surface may cause damage to the machine.

- ▶ When driving on compacted surfaces, switch the vibration system off.
- ▶ When driving up compacted inclines, only work at operating speed and with the vibration system switched off.

Speed in curves

Driving in tight curves may reduce driving stability. Consequently, reduce the drive speed when operating in tight curves.

6.5. Messages on the radio remote control

Message	Cause	Response of the machine	Remedy
	Near-field shutdown system was tripped	Driving and steering commands are stopped	Remove the machine from the safety area OR drive in the opposite direction
	The remote shutdown system was tripped	Driving and steering commands are stopped	Step closer to the machine
	Radio connection disrupted	Driving and steering commands are stopped. The engine is switched off.	Find the cause of why the radio connection was lost. If necessary, refer to the “Maintenance” section for assistance
	Vibration lever, drive lever or steering level is not in the zero position	Unable to start	Move all levers to the neutral position
	Engine oil pressure too low	Engine is switched off	Check engine oil, see section “Maintenance”
	Coolant temperature is too high	The engine is switched to a safe mode 30 seconds after the error is reported.	Allow the engine to cool down at idle speed. Check the coolant level if necessary, see section “Maintenance”.
	Machine operates at rapid motion speed	---	---
	Automativ vibration is activated	---	---

Message	Cause	Response of the machine	Remedy
	Air filter is fouled	The engine is shut down 10 minutes after the error is reported.	Clean the air filter, see section “Maintenance”
	Engine preheats	Engine start is delayed slightly	The engine starts following the preheating process.
	Error in the electronic control unit OR Insufficient voltage in the starter battery	Engine switches off, restart not possible	Since this error can also be produced by a drained starter battery, start by checking the battery voltage and charge the battery if necessary. If the battery voltage is correct, the last two digits of the displayed error code give information about the cause of the error: 01 - Defect in antenna for proximity recognition sensor at the front 02 - Defect in antenna for proximity recognition sensor at the back 03 - Defect in both antennas for the proximity recognition sensor 04 - The antennas for the proximity recognition sensor have been mixed up.
	Indicates the charging status of the radio remote control	---	If the charging status drops below 10 %, it should be replaced and recharged the next time the engine is stopped.
	Indicates the signal strength of the radio remote control	---	---
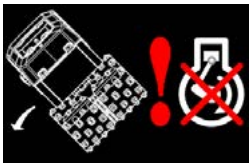	The machine has tipped over	Engine shuts down immediately. A restart is not possible.	See section 6.2 “Rollover protection”. Set the machine upright immediately. Do NOT restart the engine. Contact an authorized dealer.
	Permanent vibration is activated	---	---

6.6. The Compatrol compaction control system

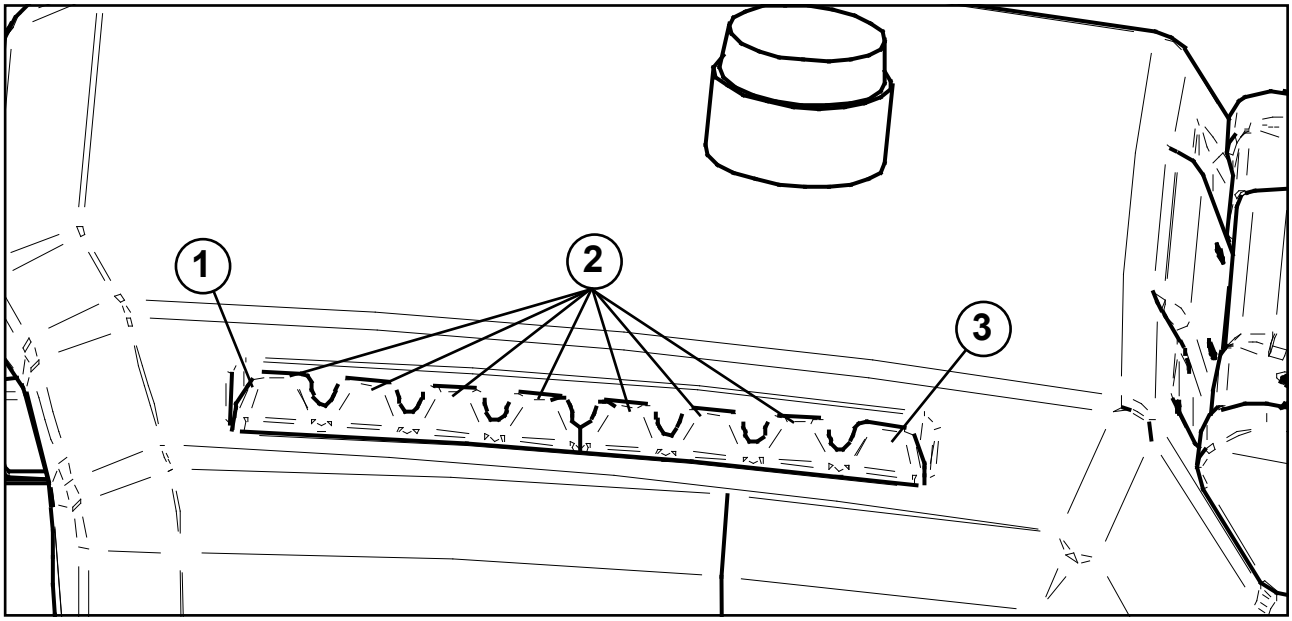

1 Operational status indicator (Green)	This indicator flashes as soon as the Compatrol indicator is supplied with power, but unable to measure a vibration frequency. This may be the case if the ignition is switched on or during passes without the vibration system.
2 Compaction indicator (Yellow)	The LEDs 1-7 indicate the bearing capacity of the ground. The number of lit LEDs increases with the rise in bearing capacity. If no additional LED comes on after another pass over the same spot, the maximum bearing capacity has been reached.
3 Warning light (Red)	The warning light warns of operating the vibration system on soils that are too hard. These soils cannot be compacted any further with the machine type used. Using the vibration system may cause damage to the machine.

Possible indicator states

Function test of the LEDs	When the ignition is switched on, the yellow LEDs (2) light up in ascending order or go out in reverse order.
Ignition on/engine running without vibration	The warning light (3) lights up permanently, and the operational status indicator (1) signals by flashing that no operating frequency has been detected.
Reaching the operating frequency, operation	Once the vibration system has reached the operating frequency, the warning light (3) will go out. The operational status indicator (1) switches from green to yellow and indicates the bearing capacity of the ground.
Illumination of the warning light	The warning light warns of operating the vibration system on soils that are too hard. If all LEDs of the compaction indicator (2) are lit together with the warning light (3), the soil to be compacted is too hard. Stop operating the vibration system to avoid damage to the machine.

The attainable maximum may vary with the type and composition of the soil. On sand, the maximum is commonly reached at a low number of lit LEDs.
Following the compaction of a mix of gravel and crushed rock that is uniformly graded and contains the proper concentration of water, the indicator is likely to show six to seven lit LEDs.
It is important to closely monitor the indicator during the last pass. Places where the number of lit LEDs drops sharply are poorly compacted. In these places, the soil needs to be compacted again or may even have to be replaced.

7. Transport

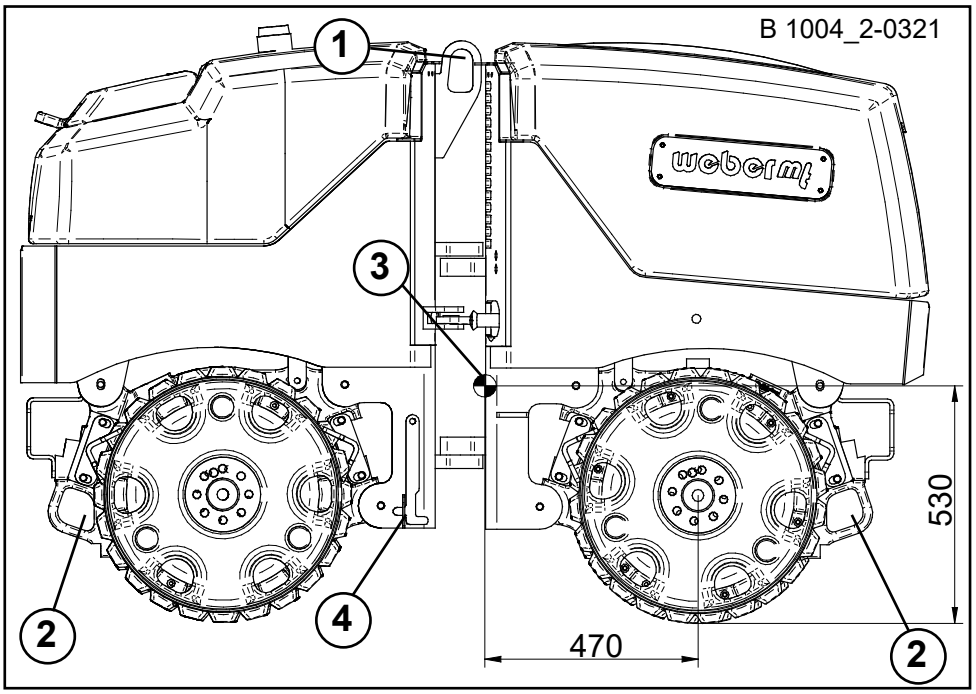

7.1. Lifting the machine

The machine can be lifted for loading onto a vehicle. Before lifting the machine, make sure the articulated joint has been locked with the locking lever (4) (see section “Maintenance”). Lift the machine using the lifting ring (1). Use only slings that possess the appropriate carrying capacity. Always lift the machine straight up, never at an angle. When lifting it up, make sure the machine does not swing.

ATTENTION

Danger of material damage if the lever is not secured.

▶ After setting down the machine at its destination, pivot the locking lever (4) into the rear section and secure it with the spring cotter pin.

7.2. Lashing on the transport vehicle

When transporting it on a vehicle, secure the machine with wedges in front of and behind the drums. Feed suitable lashing material through the attachment points (2) in the central bars and lash the machine securely to the transport vehicle. Make sure the articulated joint has been secured with the locking lever (4) (see section “Maintenance”).

7.3. Strapping down on the transport vehicle

If the machine is supposed to be strapped down, this must be done via the drums. To prevent them from sustaining damage, the scrapers must either be dismounted or supported on the drums with the help of wooden wedges.

ATTENTION

Danger of material damage from improper securing.

▶ Attach the lashing straps only as specified.

Center of gravity

When lifting and securing the machine on a transport vehicle, observe position number 3 as it indicates the position of the center of gravity.

Slow maneuvering

The machine offers an option for driving at a speed slower than operating speed for the purpose of loading the machine with a ramp and for maneuvering it precisely.

- ▶ Select idle speed using the “Engine speed” selector switch.
- ▶ Steer the machine using driving and steering commands.

The vibration is not available during driving at idle speed.

8. Cleaning

To prevent environmental pollution, cleaning tasks may only be executed in areas that are suitable and have been approved for this purpose (e.g. drain with oil separator).

Cleaning agent

The recommended option for cleaning the machine daily at the end of work is to use a simple jet of water. The top section must not be cleaned with a high-pressure cleaner.

If the engine or other components are supposed to be cleaned thoroughly, e.g. before scheduled maintenance, it is recommended to use a customary cold cleaning agent.

- ▶ Remove the radio remote control from its compartment. It must not be cleaned with a high-pressure cleaner.
- ▶ Never aim directly into the openings of the machine.
- ▶ To deep clean the engine, spray it with customary cold cleaning agent and rinse it off afterwards. Follow the instruction of the cleaning agent’s manufacturer.

Cleaning the radio remote control

- ▶ Wipe the radio remote control with a damp cloth and allow it to dry afterwards.
- ▶ The radio remote control must not be cleaned with a high-pressure cleaner.

9. Storage

Storage at the construction site

The machine is weather-protected and can be stored at the construction site over night.
To store it at the construction site, the machine must be parked on a level surface outside of trenches or depressions.
If parking on a slight slope cannot be avoided, the machine must be secured against rolling by placing wedges in front of the drums.

Parked machines presenting an obstacle must be secured and marked in accordance with statutory regulations, particularly in the area of public traffic surfaces.

Securing the machine against unauthorized use:

- ▶ Pull out the ignition key.
- ▶ Remove the battery from the radio remote control. It serves as a safeguard against unauthorised use in accordance with ISO 15817.
- ▶ Stow the radio remote control in the designated compartment.
- ▶ The hood covering the engine compartment, the hood above the compartment housing the electronic components and the flap of the compartment in the rear hood must be secured with locks.

Storage for an extended period

If the machine is supposed to be stored for a period longer than one month, the following measures must be taken:

- ▶ Check the charging status of the battery, recharge if necessary.
- ▶ Check the charging status of the battery on a regular basis, but not less than every 3 months. Another option is to use a permanent charger / battery maintainer.
- ▶ Clean the entire machine thoroughly.
- ▶ Check all lines and containers carrying liquids and operating fluids for leaks. Correct any detected defects.
- ▶ Check and, if necessary, top off all fluid levels specified in the section “Maintenance”.
- ▶ Check the air filter in accordance with the section “Maintenance” and clean or replace them if necessary.
- ▶ Check, drain and, if necessary, replace the fuel filter as specified in the section “Maintenance”.
- ▶ Lubricate all moving parts in accordance with the lubrication chart.

10. Maintenance

General information

The section below contains instructions that need to be observed for regular maintenance. Read these instructions carefully and follow them in order to prevent downtimes of the machine caused by excessive wear or damage to the machine.
Also read the safety instructions relevant to machine maintenance before you begin with the maintenance work. They help minimize the risk to maintenance personnel.

Maintenance personnel

Maintenance and repairs require specific qualifications. These operations may only be carried out by trained professionals. Maintenance personnel must be instructed on how to operate the machine by the owner or by the owner’s assigned personnel.

Maintenance personnel are required to wear the personal protective equipment during work (see section “Safety”).

10.1. Maintenance overview

Activity / Interval	Check for visible damage, leaks, etc.	Check the control and safety devices for proper operation	Check threaded unions an hoses for leaks, tighten threaded unions	Check hydraulic oil level	Check engine oil level	Check coolant level in the expansion reservoir and in the radiator	Check the charging status of the trans-mitter	Check the air filter. Clean, if necessary	Check all threaded unions for firm seat	Clean the water / hydraulic oil radiator from the outside	Check and drain the water separator	Change engine oil and engine oil filter
Initial maintenance / 25 operating hrs									X			X
Daily maintenance	X	X	X	X	X	X	X	X				
Every 50 operating hrs									X	X	X	
Every 150 operating hrs or every year									X	X	X	X
Every 300 operating hrs									X	X	X	X
Every 600 operating hrs									X	X	X	X
See section				10.2.3	10.2.3	10.2.3	6.3	10.2.6			10.2.7	10.2.4 10.2.5

Check condition and tension of the Fan V-belt. Adjust if necessary	Check engine support and attachments for firm seat	Check the cooling system for firm seat	Lubricate the articulated joint	Lubricate the drum bearings	Lubricate the cylinder	Replace air filter	Change fuel filter	Change the oil in the exciter	Change the engine V-belt	Clean the diesel tank	Change hydraulic oil and filter	Change coolant (or every 2 years)	Check injection nozzles
											X		
			X										
X	X	X	X	X	X	X	X	X			X		
X	X	X	X	X	X	X	X	X			X		
X	X	X	X	X	X	X	X	X	X	X	X	X	X
10.2.12			10.2.14	10.2.14	10.2.14	10.2.6	10.2.8	10.2.11	10.2.13	Kubota		10.2.9 10.2.10	Kubota

YouTube Playlist - Service Videos

10.2. Description of the maintenance operations

10.2.1. Opening / closing the hood

⚠ CAUTION

Danger of burn injuries at hot engine and its attachments.
Especially the exhaust is very hot after operation.

- ▶ Allow the combustion engine to cool down sufficiently before starting work.
- ▶ Do not reach into the area of the hot engine.

- ▶ Shut off the machine as described in section 5.8.
- ▶ Release the lock (1) to open the engine hood (2) with the help of the handle (3).
- ▶ Close the hood in reverse order.

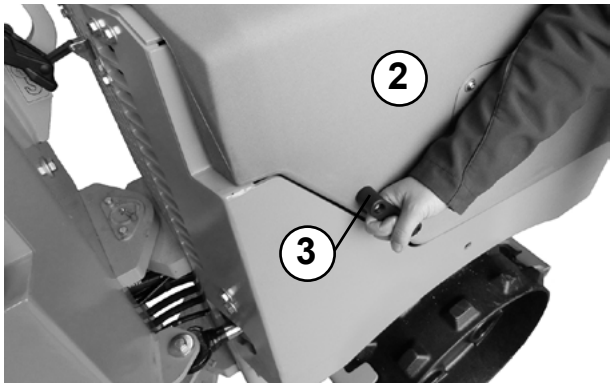

10.2.2. Securing the articulated joint

- ▶ Pull the safety cotter pin (1) out of the locking bracket (2).
- ▶ Pivot the locking bracket (2) counterclockwise into the designated opening.

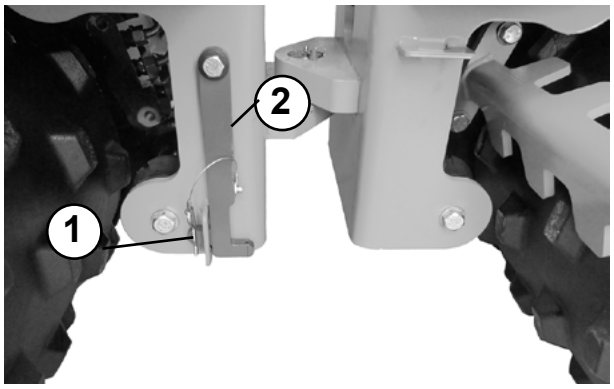

- ▶ Secure the locking bracket using the safety cotter pin (1).
- ▶ Proceed in reverse order to release the articulated joint.

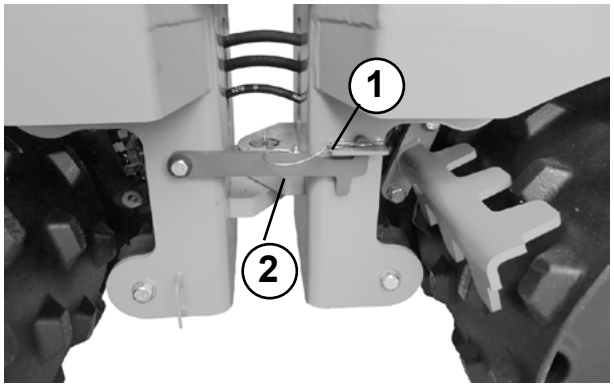

10.2.3. Checking fluid levels

ATTENTION

Danger of material damage from improper checking of the fluid levels.

▶ Only check the fluid levels when at operating temperature and with the machine parked horizontally.

▶ Shut off the machine as described in section 5.8.

▶ Open the hoods as described in section 10.2.1.

▶ To check the engine oil level, wait for approx. 2 minutes after switching off the combustion engine.

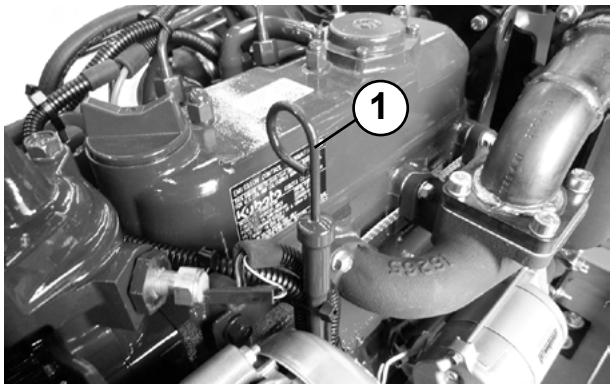

▶ Pull out the oil dipstick (1) and wipe it off with a suitable cloth.

▶ Reinsert the dipstick (1) and pull it out again.

▶ The oil level must range between the two markings (2). If this is not the case, proceed as described in section 10.2.4.

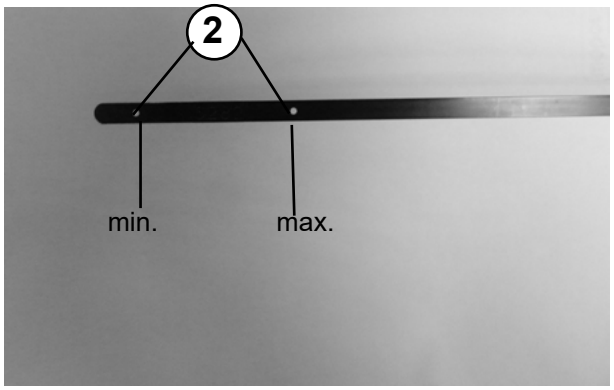

▶ The fuel level can be checked through the slightly transparent fuel tank.

▶ If the fuel level is low, open the cap (3).

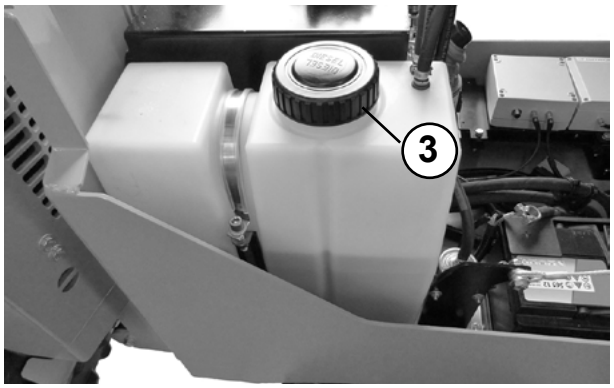

▶ Top off the fuel following the specifications in the table included in section 10.3.

▶ Check the hydraulic oil level using the view glass (4).

▶ The fill level must be at ¾ of the view glass. If this is not the case, proceed as described in section 10.2.10.

▶ The coolant level can be checked through the slightly transparent expansion reservoir (5).

▶ The coolant level must range between the two markings (6). If this is not the case, top off the coolant following the specifications in the table included in section 10.3.

▶ Also check the level of the coolant in the radiator (7). It must be filled up all the way.

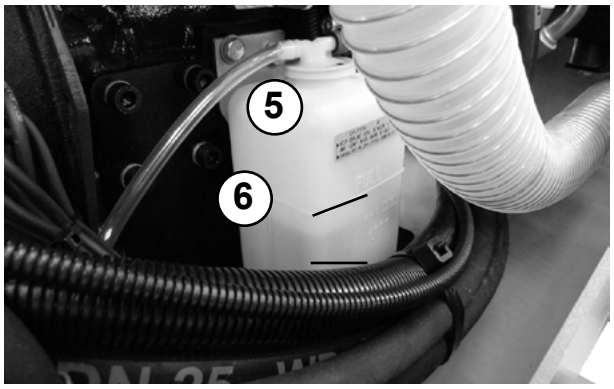

⚠ WARNING

The tank is pressurized. Risk of scalding due to hot coolant.

▶ Do not open the cap unless the radiator is cold!

▶ Open the cap (8) and top off the coolant.

▶ Close the cap (8).

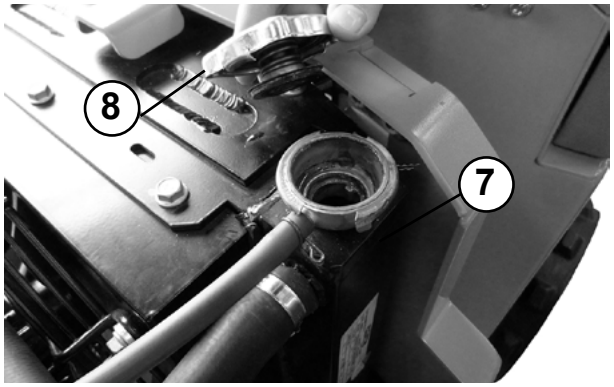

10.2.4. Changing the engine oil

Only drain the engine oil when at operating temperature.

▶ Shut off the machine as described in section 5.8.

▶ Open the hoods as described in section 10.2.1.

▶ Place a suitable collection vessel (1) under the oil drain (2).

▶ Open the oil drain (2) and allow the oil to drain into the collection vessel (1).

⚠ WARNING

Risk of scalding due to hot engine oil.

▶ Wear protective gloves.
▶ Do not reach into draining oil.

▶ Close the oil drain (2).

▶ Fill fresh engine oil into the oil inlet (3).

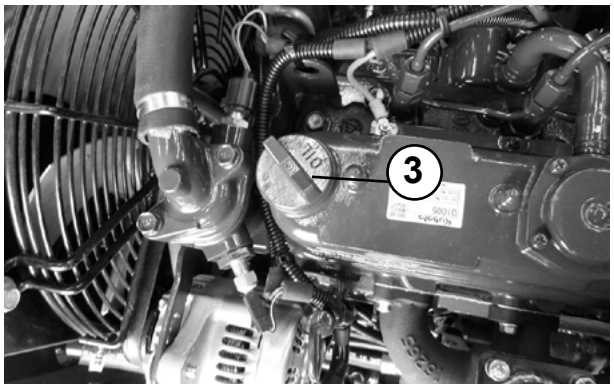

▶ For the oil fill quantity, refer to the applicable specifications in the table included in section 10.3.

▶ Finish by checking the engine oil level using the dipstick (4). The oil level must range between the markings.

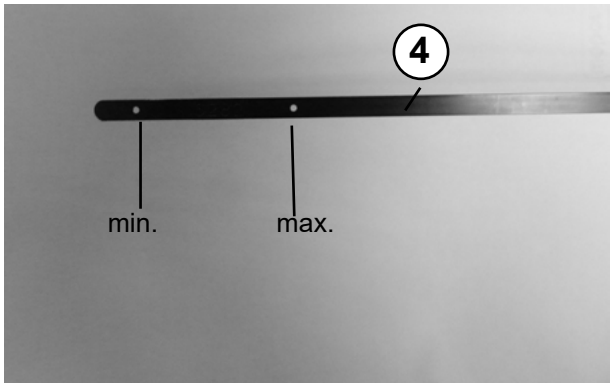

ATTENTION

Risk of environmental damage!

▶ Properly dispose of waste oil in accordance with environmental protection regulations.

10.2.5. Changing the engine oil filter

▶ Shut off the machine as described in section 5.8.

▶ Open the hoods as described in section 10.2.1.

▶ Drain engine oil as described in section 10.2.4.

▶ Unscrew the engine oil filter (1).

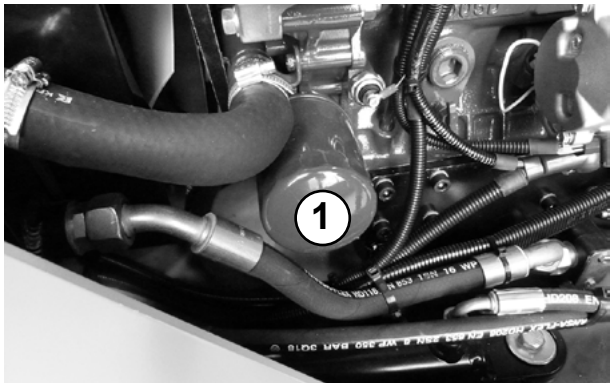

ATTENTION

Risk of environmental damage.

▶ Catch the residual oil and the used engine oil filter using a suitable collection vessel and properly dispose of waste oil in accordance with environmental protection regulations.

▶ Apply fresh engine oil to the seal of the new engine oil filter.

▶ Screw in a new engine oil filter hand-tight.

▶ Top off engine oil as described in section 10.2.4.

10.2.6. Cleaning / changing the air filter

▶ Shut off the machine as described in section 5.8.

▶ Open the hoods as described in section 10.2.1.

⚠ WARNING

Risk of breathing difficulties, including suffocation, from the dust produced while blowing out the air filter.

▶ Only blow out the air filter in well-ventilated locations.
▶ Wear a dust mask.

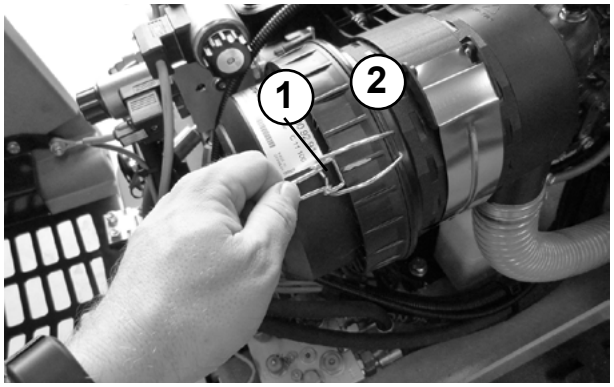

▶ Open the brackets (1) to remove the cap (2).

▶ Remove the air filter (3) and clean / replace it.

▶ Clean the air filter with compressed air – max. 5 bar. Blow the dirt out of the air filter from the inside out.

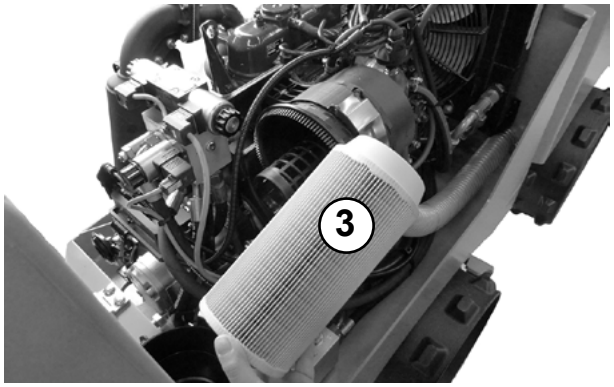

Should complete cleaning with compressed air no longer be possible on account of damp or oily dirt, the air filter must be replaced.

▶ Make sure the air filter is firmly seated when reinstalling it. The cleaning opening on the cap (2) must point down vertically.

▶ Close the brackets (1) carefully.

10.2.7. Draining the fuel filter

▶ Shut off the machine as described in section 5.8.

▶ Open the hoods as described in section 10.2.1.

▶ Place a suitable collection vessel under the fuel filter.

▶ Open the drain valve (2) and allow the water to drain into the collection vessel.

▶ Close the drain valve (2).

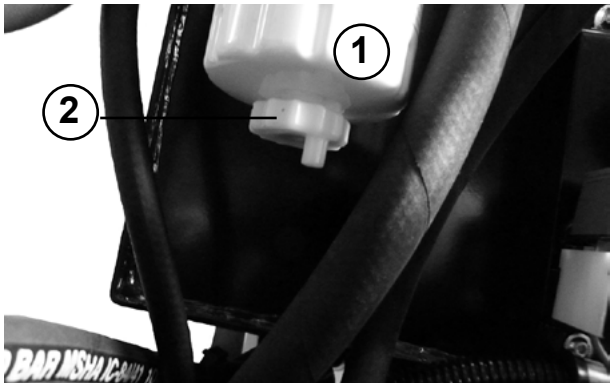

ATTENTION

Risk of environmental damage.

▶ Properly dispose of the collected fuel-water mix in accordance with environmental protection regulations.

10.2.8. Changing the fuel filter

▶ Shut off the machine as described in section 5.8.

▶ Open the hoods as described in section 10.2.1.

▶ Place a suitable collection vessel under the fuel filter (1).

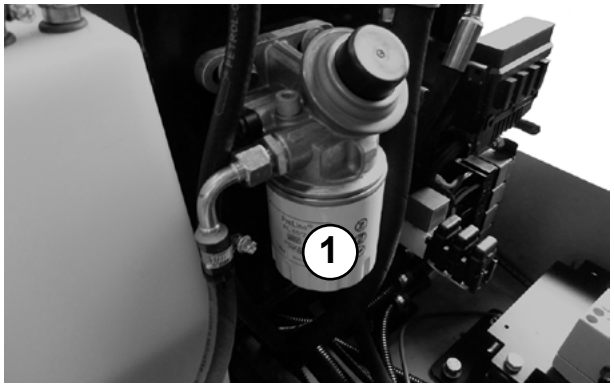

▶ Open the drain valve (2) and allow the fuel to drain into the collection vessel.

▶ Unscrew the fuel filter (1).

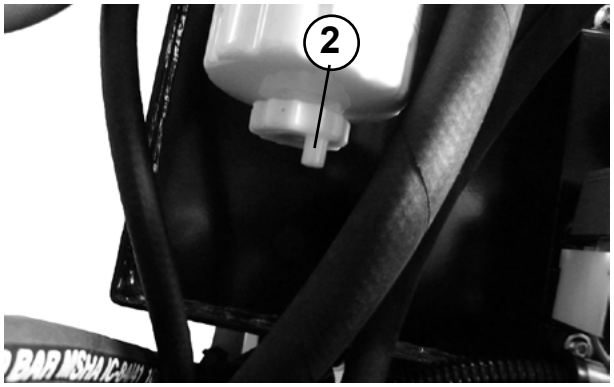

ATTENTION

Risk of environmental damage.

▶ Properly dispose of the used fuel filter in accordance with environmental protection regulations.

▶ Apply fuel to the sealing surface of the new fuel filter.

▶ Screw in a new fuel filter hand-tight.

▶ When starting the machine for the first time after changing the filter, support the fuel pump by actuating the hand pump (3).

10.2.9. Changing the hydraulic oil filter

▶ Shut off the machine as described in section 5.8.

▶ Open the hoods as described in section 10.2.1.

▶ Open the cap (1).

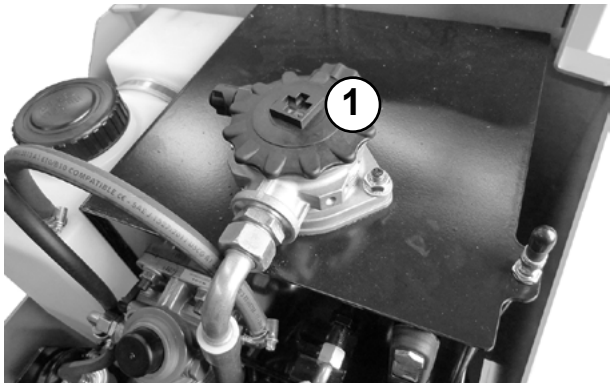

▶ Slowly pull the hydraulic oil filter (2) with the protective cage (3) out of the enclosure (4).

▶ Pull the hydraulic oil filter (2) out of the protective cage (3).

▶ Slide the protective cage (3) back into the enclosure (4).

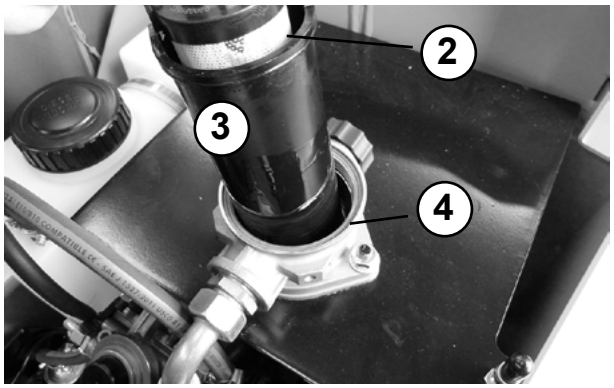

ATTENTION

Risk of environmental damage.

▶ Properly dispose of the used hydraulic filter in accordance with environmental protection regulations.

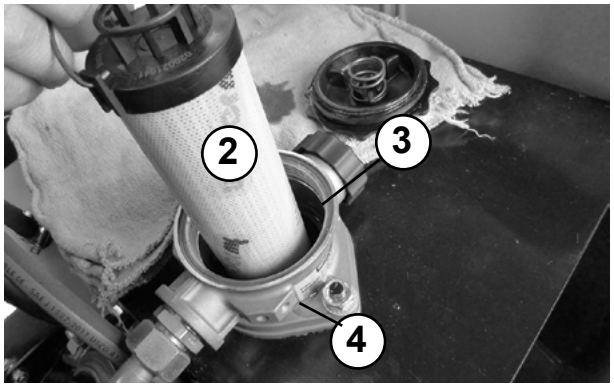

▶ Insert a new hydraulic oil filter (2) into the protective cage (3) housed in the enclosure (4).

▶ Push the hydraulic oil filter (2) all the way down.

▶ Fill the hydraulic oil tank through the hydraulic oil filter until the fill level indicator in the view glass shows approx. ¾. Refer to the table included in section 10.3 for the relevant specifications of the hydraulic oil.

▶ Close the cap (1).

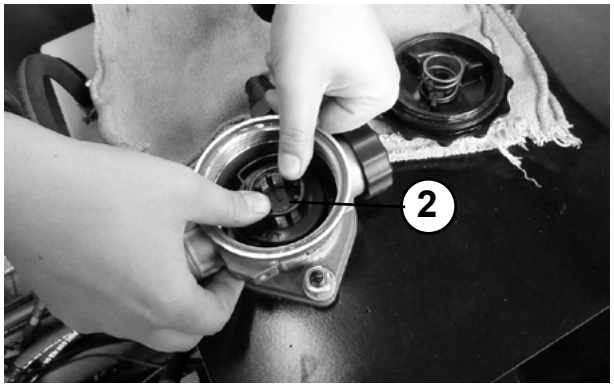

10.2.10. Changing the hydraulic oil

Only drain hydraulic oil when at operating temperature.

▶ Shut off the machine as described in section 5.8.

▶ Secure the articulated joint as described in section 10.2.2.

▶ Open the hoods as described in section 10.2.1.

▶ Place a suitable collection vessel under the hydraulic oil drain (1).

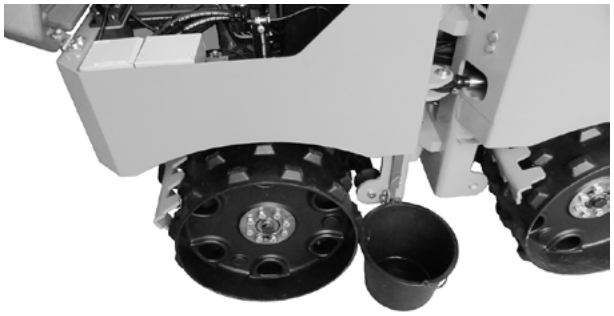

▶ Open the hydraulic oil drain (1) and allow the hydraulic oil to drain into the collection vessel.

▶ Use a new copper washer when closing the drain.

⚠ WARNING

Risk of scalding due to hot hydraulic oil.

▶ Wear protective gloves.

▶ Do not reach into draining oil.

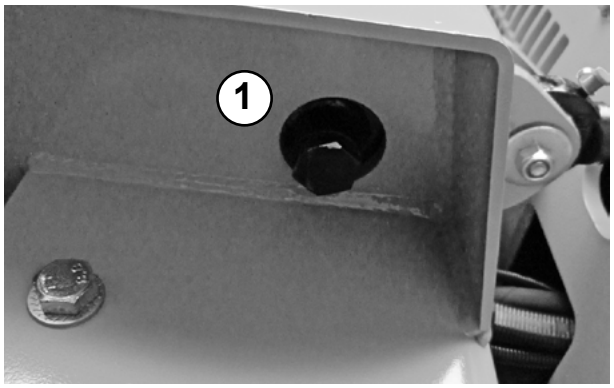

▶ Refer to the table included in section 10.3 for the specifications of the hydraulic oil.

▶ Open the cap (2) and fill hydraulic oil into the tank as described in section 10.2.9.

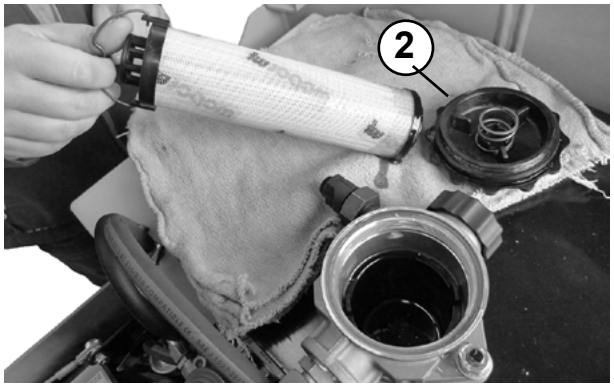

▶ Top off hydraulic oil until the view glass (3) shows a fill level of approx. ¾.

10.2.11. Changing the exciter / drive oil

Only drain oil from the exciter / drive when at operating temperature.

▶ Shut off the machine as described in section 5.8.

▶ Secure the articulated joint as described in section 10.2.2.

▶ Secure the machine to keep it from overturning.

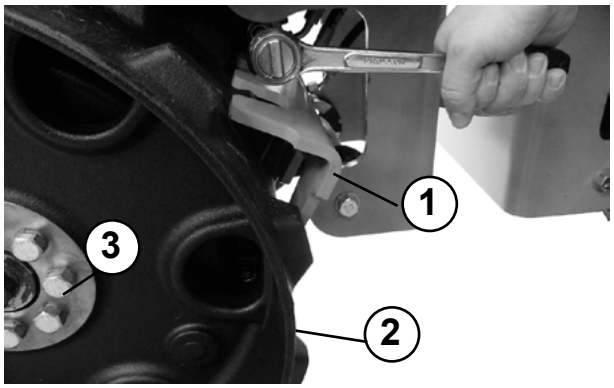

▶ Loosen the dirt scrapers (1) on either side of the drum (2).

▶ Unscrew all screws (3) on the drum (2).

⚠ WARNING

Risk of injury if the loosened drum slips or rolls away.

▶ Remove loosened drums immediately.

▶ Secure the drum to keep it from slipping or rolling away.

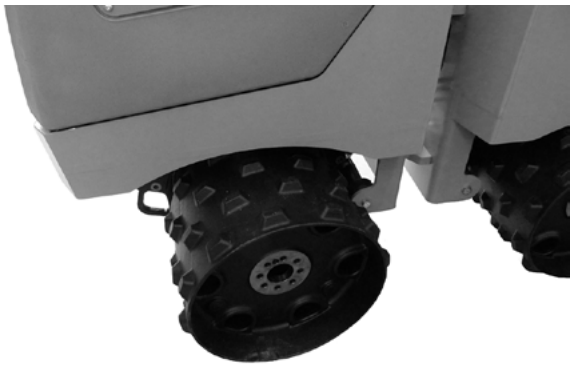

▶ Place a suitable collection vessel under the oil drain plug (3).

▶ Open the oil drain plug (3) and allow the oil in the exciter / drive to drain into the collection vessel.

⚠ WARNING

Risk of scalding due to hot hydraulic oil.

▶ Wear protective gloves.

▶ Do not reach into draining oil.

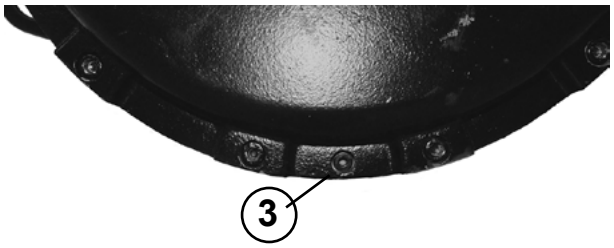

▶ Close the oil drain plug (3) and install the drum (2).

▶ Use a new copper washer when closing the drain.

⚠ WARNING

Risk of severe injury if the machine rolls away or tips over.

- ▶ Secure the machine with suitable means to keep it from rolling and overturning.

- ▶ Use suitable lifting gear to lift the machine as shown on one side by approx. 50 cm.

- ▶ Open the oil filler plug (5).
- ▶ Top off the oil in the exciter / drive following the table included in section 10.3.
- ▶ Close the oil filler plug (5).
- ▶ Use a new copper washer when closing the drain.
- ▶ Set the machine down. Keep proper footing while doing so.
- ▶ Repeat the process on the second axle of the machine.

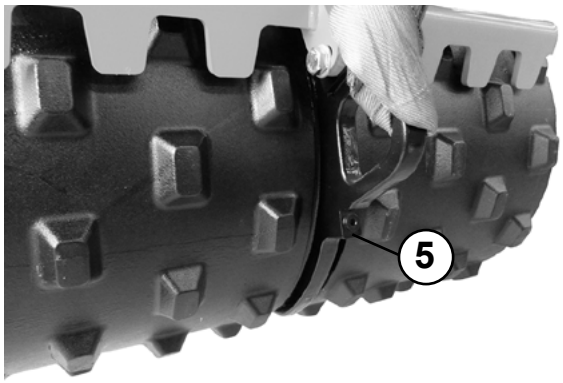

10.2.12. Checking / adjusting the fan V-belt

⚠ CAUTION

Danger of burn injuries at hot engine and its attachments.

▶ Allow the combustion engine to cool down sufficiently before starting work.

▶ Shut off the machine as described in section 5.8.

▶ Open the hoods as described in section 10.2.1.

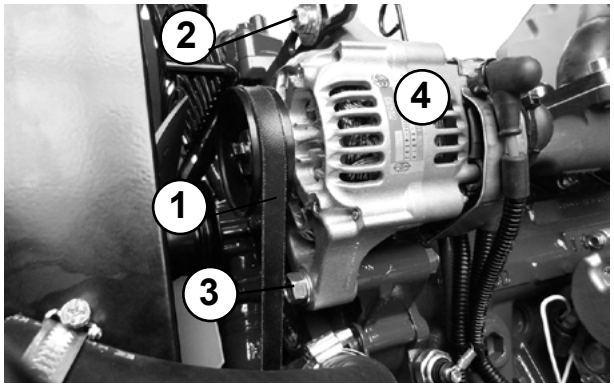

▶ Check the tension of the fan V-belt (1). The tension is correct if the belt can be depressed by approx. 1 cm with a force of approx. 100 N.

Proceed as follows if the belt tension is too high or too low:

▶ Loosen the set screw (2) and the fastening screw (3).

▶ Tilt the alternator (4) until the required tension has been reached.

▶ Tighten the fastening screw (3) and the set screw (2) of the alternator (4).

▶ Check the tension of the fan V-belt again. Repeat the process if necessary.

10.2.13. Changing the fan V-belt

⚠ CAUTION

Danger of burn injuries at hot engine and its attachments.

▶ Allow the combustion engine to cool down sufficiently before starting work.

▶ Shut off the machine as described in section 5.8.

▶ Open the hoods as described in section 10.2.1.

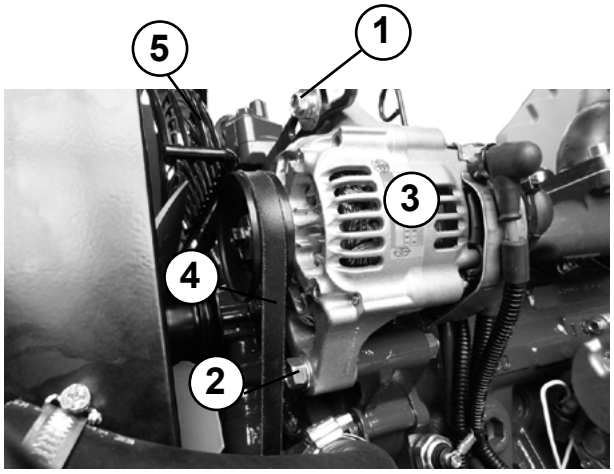

▶ Loosen the set screw (1) and the fastening screw (2) of the alternator (3) and relieve the fan V-belt (4).

▶ Remove the protective cage (5) of the fan.

▶ Replace the fan V-belt (4).

▶ Install the protective cage (5) of the fan.

▶ Tighten the fan V-belt as described in section 10.2.12.

10.2.14. Lubrication chart

▶ Shut off the machine as described in section 5.8.

▶ Lubricate the individual positions of the machine as specified in the table below. Use grease that complies with the specification “KP2K-20” according to DIN 51502.

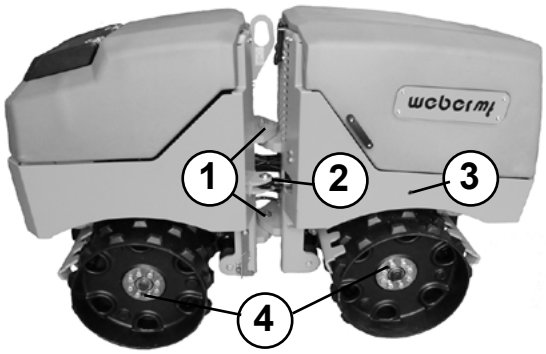

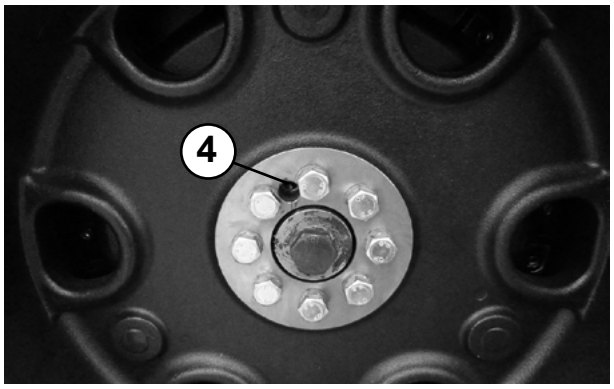

No.	Lubricating point	Quantity
1	Articulated joint (top + bottom)	2 strokes
2	Cylinder on the left	2 strokes
3	Cylinder on the right	2 strokes
4	Drum bearings	3 strokes

ATTENTION

Risk of environmental damage.

▶ Properly dispose of residual lubricants and cleaning agents in accordance with environmental protection regulations.

10.3. Operating fluids and fill levels

Assembly	Operating material		Quantity
	Summer	Winter	
Engine oil	SAE 10W-40 (–10 °C to 25 °C) On request for other temperature ranges *Quality: API – CF* *MIL-L-2104C*	SAE 10W-40	3.5 l
Cooling system	Water-coolant Concentration 50 % Coolant concentration according to SAE J1034 and SAE J814c		3.1 l
Fuel system	Diesel EN 590 BS 2869 A1 / A2 ASTM D 975-09a 1-D S15 / 2-D S15	Winter diesel	24 l
Hydraulic system Traversing mechanism + steering	Hydraulic oil (ISO), H-LP 46 kinem. viscosity 47 mm²/s (cSt) at +40 °C First filling: Fuchs Renolin MR46MC		40 l
Exciter	Fully-synthetic transmission fluid API GL-5/GL-4 First filling: Fuchs Titan SINTOPOID LS SAE 75W-90		2 x 1.5 l

10.4. Final shutdown and disposal

ATTENTION

Risk of environmental damage from the operating fluids of the machine.

- Carry out the work steps below carefully and dispose of all operating fluids in accordance with statutory regulations. Take up any spilled operating fluids immediately and dispose of them properly.

- Drain fuel tank.
- Drain coolant.
- Drain hydraulic oil completely.
- Drain engine oil.
- Drain oil from exciter / drive.
- Remove the battery and properly dispose of it in accordance with statutory regulations.

10.5 Hydraulic circuit diagram

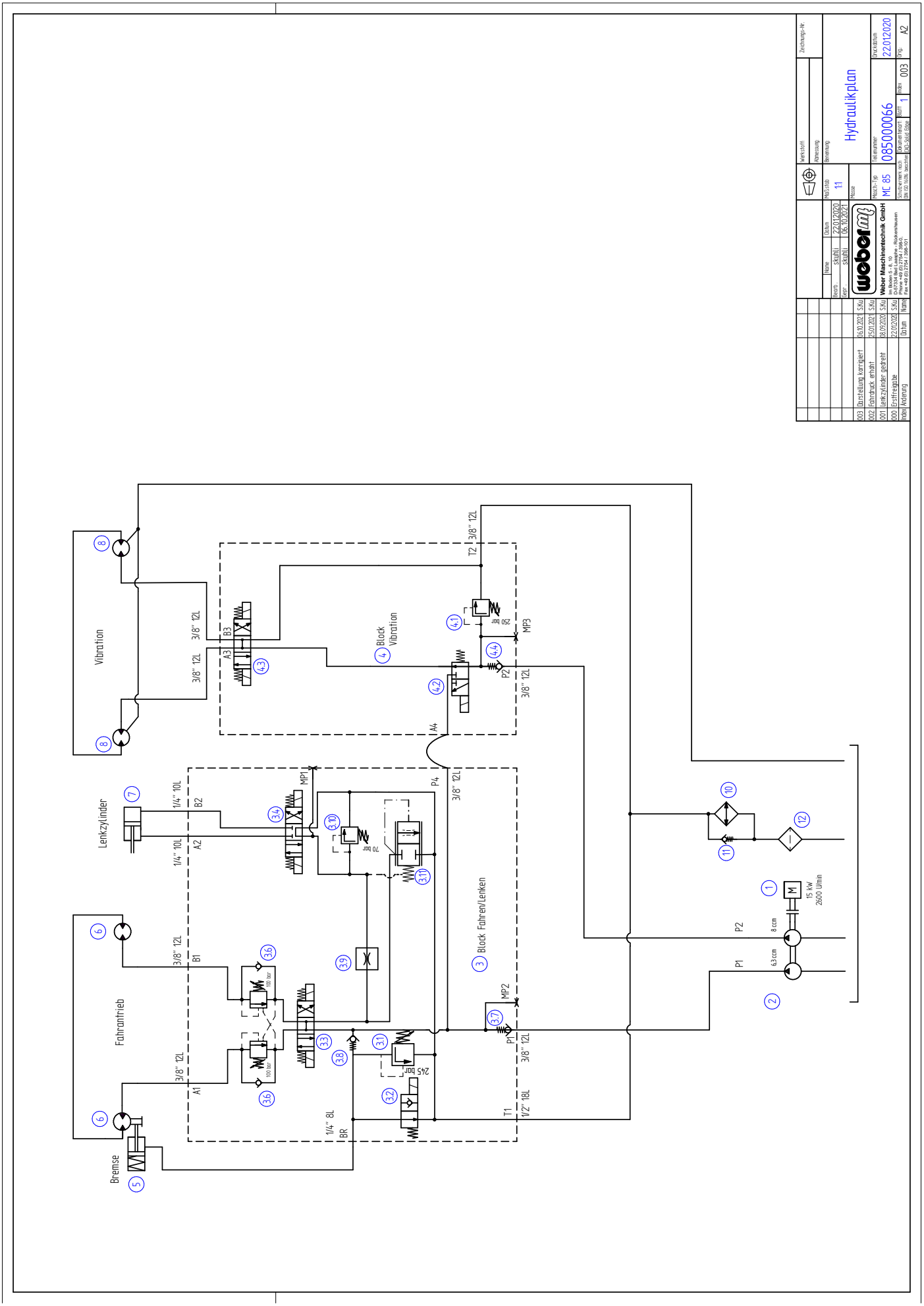

Part	Units	Designation
1	1	Diesel engine
2	1	Tandem gear pump
3	1	Control block driving / steering
3.1	1	Pressure relief valve
3.2	1	2/2-way valve
3.3	1	4/3-way valve
3.4	1	4/3-way valve
3.6	2	Lowering brake valve
3.7	1	Check valve
3.8	1	Check valve
3.9	1	Throttle Ø 1.8
3.10	1	Pressure relief valve
3.11	1	Deadweight tester 10 bar
4	1	Control block vibration system
4.1	1	Pressure relief valve
4.2	1	3/2-way valve
4.3	1	4/3-way valve
4.4	1	Check valve
5	1	Brake
6	2	Gerotor motor
7	1	Steering cylinder
8	2	Gear motor
10	1	Combination radiator
11	1	Check valve
12	1	Return filter
MP1	1	Test port steering
MP2	1	Test port rapid motion
MP3	1	Test port vibration

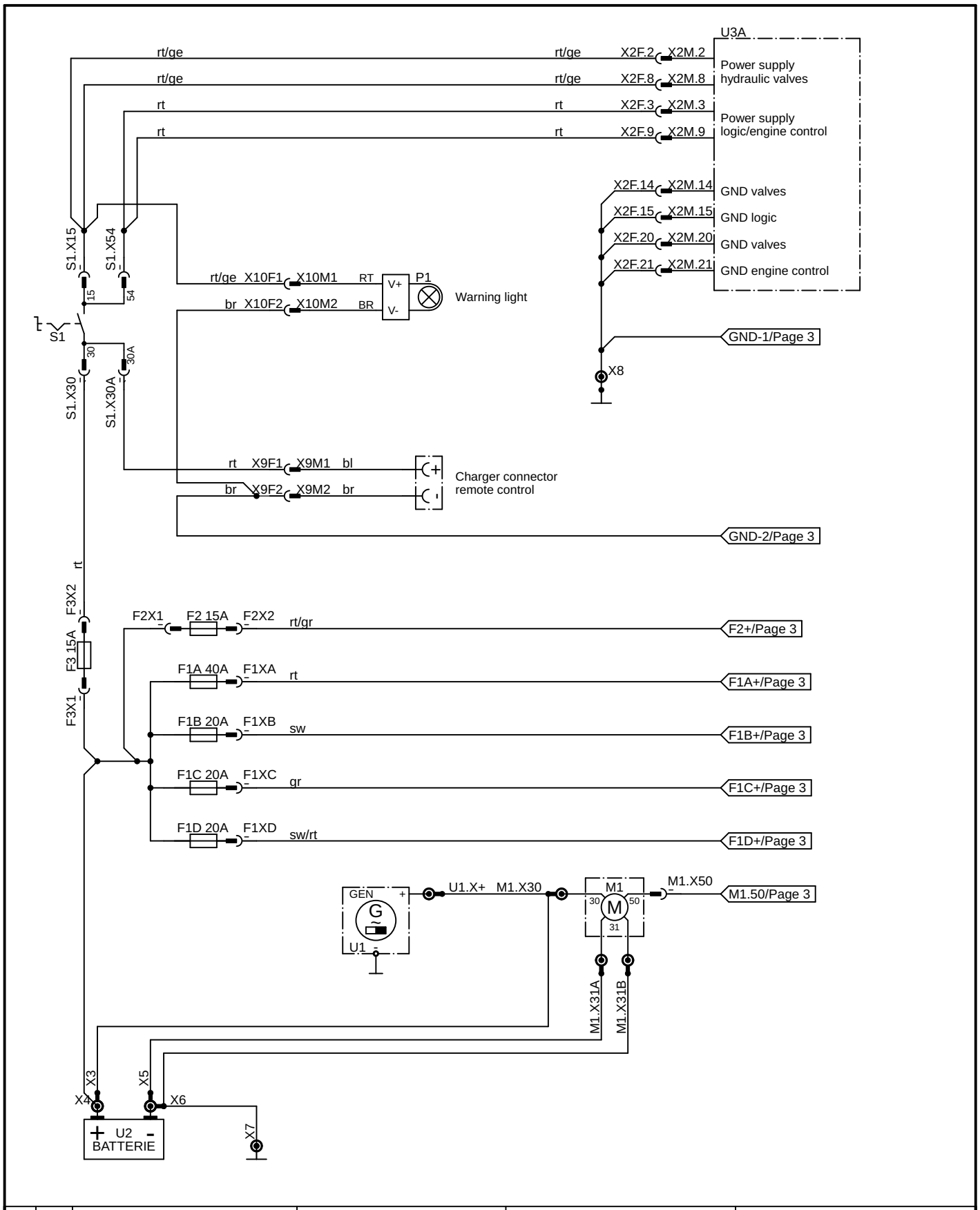

Teil	Menge	Teilenummer	Benennung 1	Benennung 2	Werkstoff

1	Zuleitungen V3.4	29.06.2021	TEE
0	Neuerstellung	12.05.2021	TEE
Index	Änderung	Datum	Name

Fertigungstoleranzen: DIN EN ISO 9013
DIN ISO 2768-mK DIN ISO 8062-CT8
DIN ISO 1302 DIN EN ISO 13920-B/F

	Name	Datum
Bearb.	B. Rothenpieler	29.06.2021
Gepr.	B. Rothenpieler	30.06.2021

Weber Maschinentechnik GmbH
Im Boden 5-8, 10
D-57334 Bad Laasphe-Rückershausen
Phone +49 (0) 2754 / 398-0
Fax +49 (0) 2754 / 398-101

Werkstoff:
Abmessung:
Zeichnungs-Nr.
Maßstab :
Masse
Benennung: Elektroschaltplan
Masch.-Typ: MC85
Ident.-Nr.: 085000072
Druckdatum: 30.06.2021
Schutzvermerk nach DIN ISO 16016 beachten
Dokumentenart: CAD-EAGLE
Blatt 2
Index 1
Orig. A4

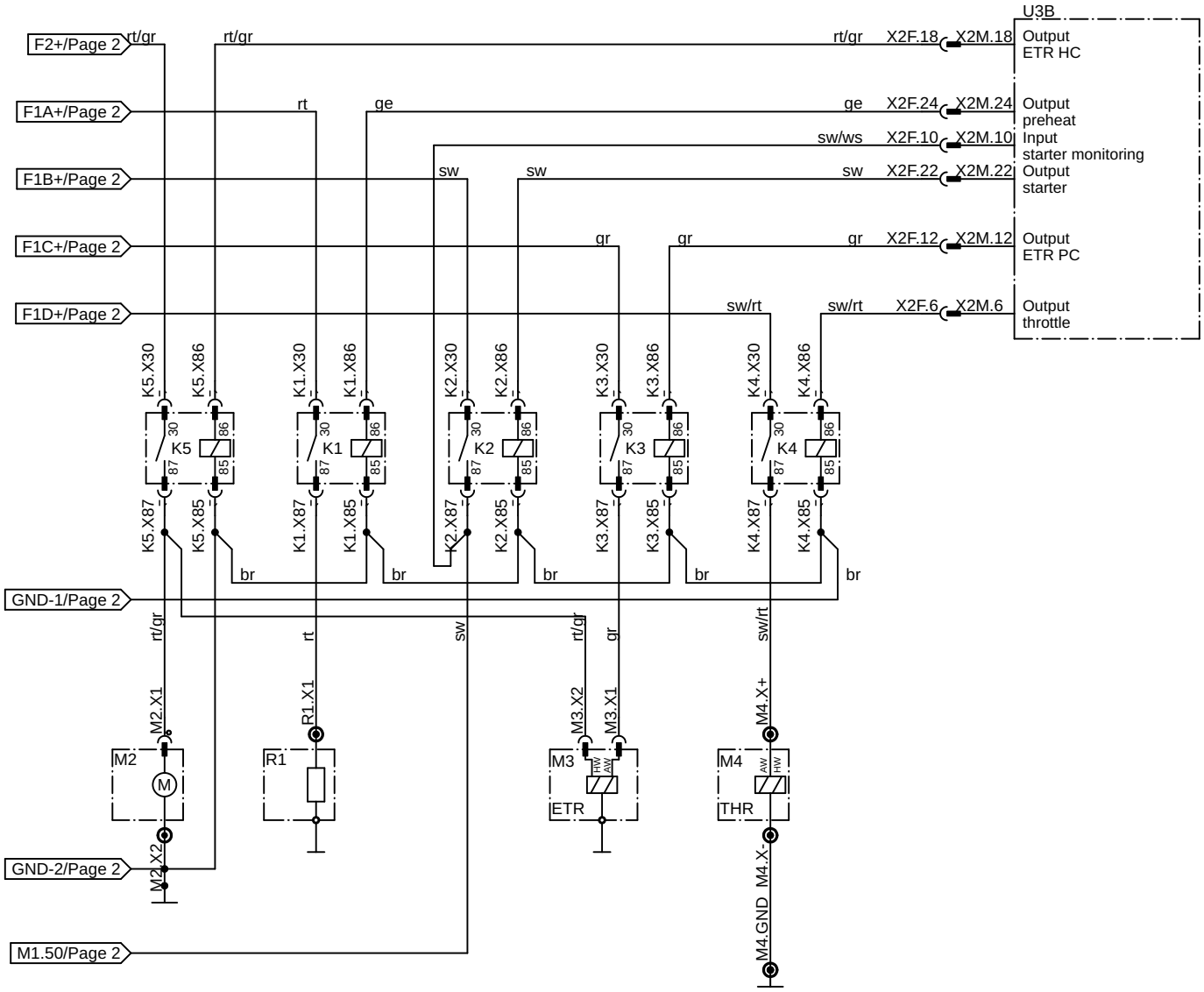

Teil	Menge	Teilenummer	Benennung 1	Benennung 2	Werkstoff

Index	Änderung	Datum	Name
1	Zuleitungen V3.4	29.06.2021	TEE
0	Neuerstellung	12.05.2021	TEE

Fertigungstoleranzen: DIN EN ISO 9013
DIN ISO 2768-mK DIN ISO 8062-CT8
DIN ISO 1302 DIN EN ISO 13920-B/F

	Name	Datum
Bearb.	B. Rothenpieler	29.06.2021
Gepr.	B. Rothenpieler	30.06.2021

Weber Maschinentechnik GmbH
Im Boden 5-8, 10
D-57334 Bad Laasphe-Rückershausen
Phone +49 (0) 2754 / 398-0
Fax +49 (0) 2754 / 398-101

Werkstoff:
Abmessung:
Zeichnungs-Nr.
Maßstab :
Masse
Benennung: Elektroschaltplan
Masch.-Typ: MC85
Ident.-Nr.: 085000072
Druckdatum: 30.06.2021
Schutzvermerk nach DIN ISO 16016 beachten
Dokumentenart: CAD-EAGLE
Blatt 3
Index 1
Orig. A4

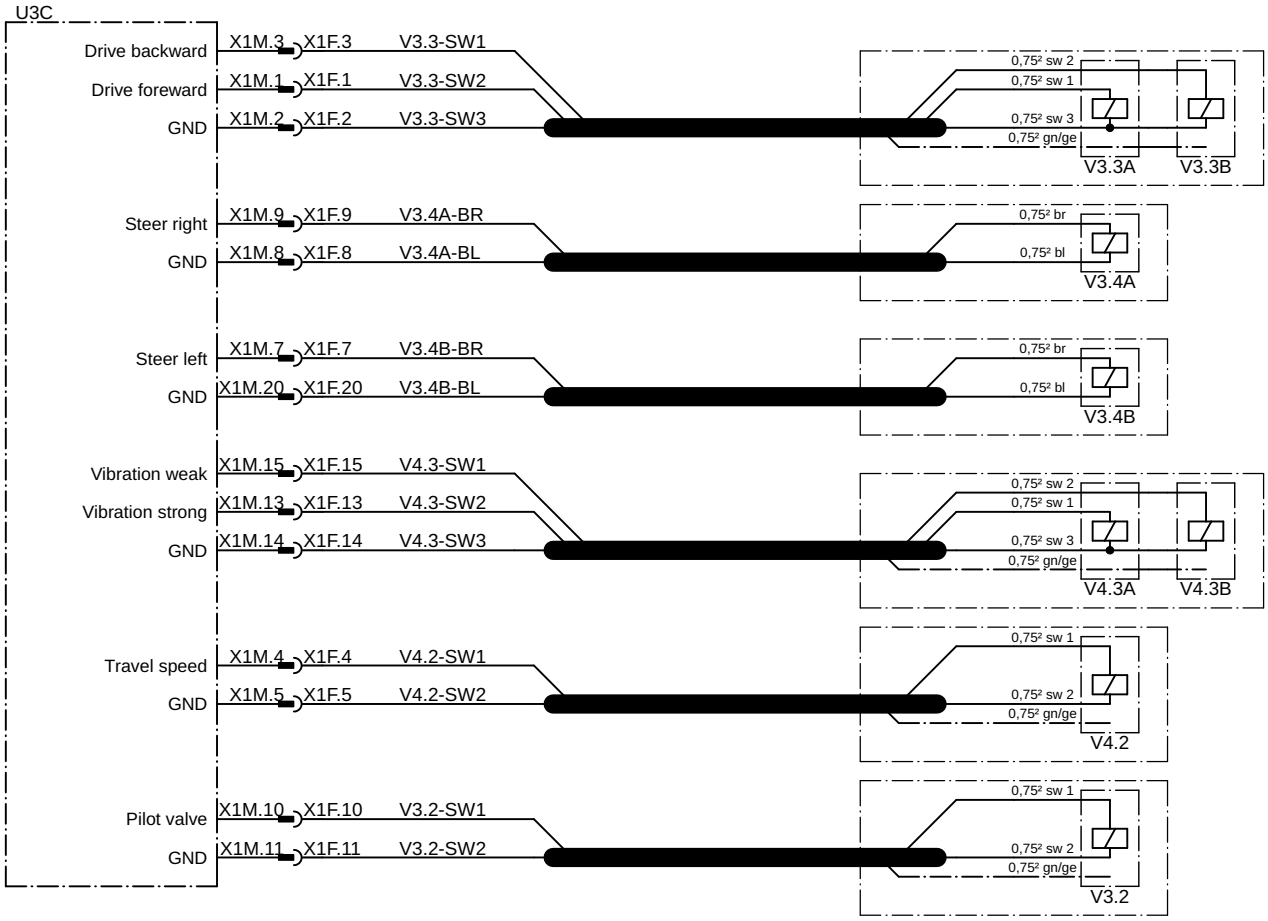

Teil	Menge	Teilenummer	Benennung 1	Benennung 2	Werkstoff

Index	Änderung	Datum	Name
1	Zuleitungen V3.4	29.06.2021	TEE
0	Neuerstellung	12.05.2021	TEE

Fertigungstoleranzen: DIN EN ISO 9013
DIN ISO 2768-mK DIN ISO 8062-CT8
DIN ISO 1302 DIN EN ISO 13920-B/F

	Name	Datum
Bearb.	B. Rothenpieler	29.06.2021
Gepr.	B. Rothenpieler	30.06.2021

Weber Maschinentechnik GmbH
Im Boden 5-8, 10
D-57334 Bad Laasphe-Rückershausen
Phone +49 (0) 2754 / 398-0
Fax +49 (0) 2754 / 398-101

Werkstoff:
Abmessung:
Zeichnungs-Nr.

Maßstab: :

Benennung: Elektroschaltplan

Masse

Masch.-Typ: MC85

Ident.-Nr.: 085000072

Druckdatum: 30.06.2021

Schutzvermerk nach DIN ISO 16016 beachten | Dokumentenart: CAD-EAGLE | Blatt 4 | Index 1 | Orig. A4

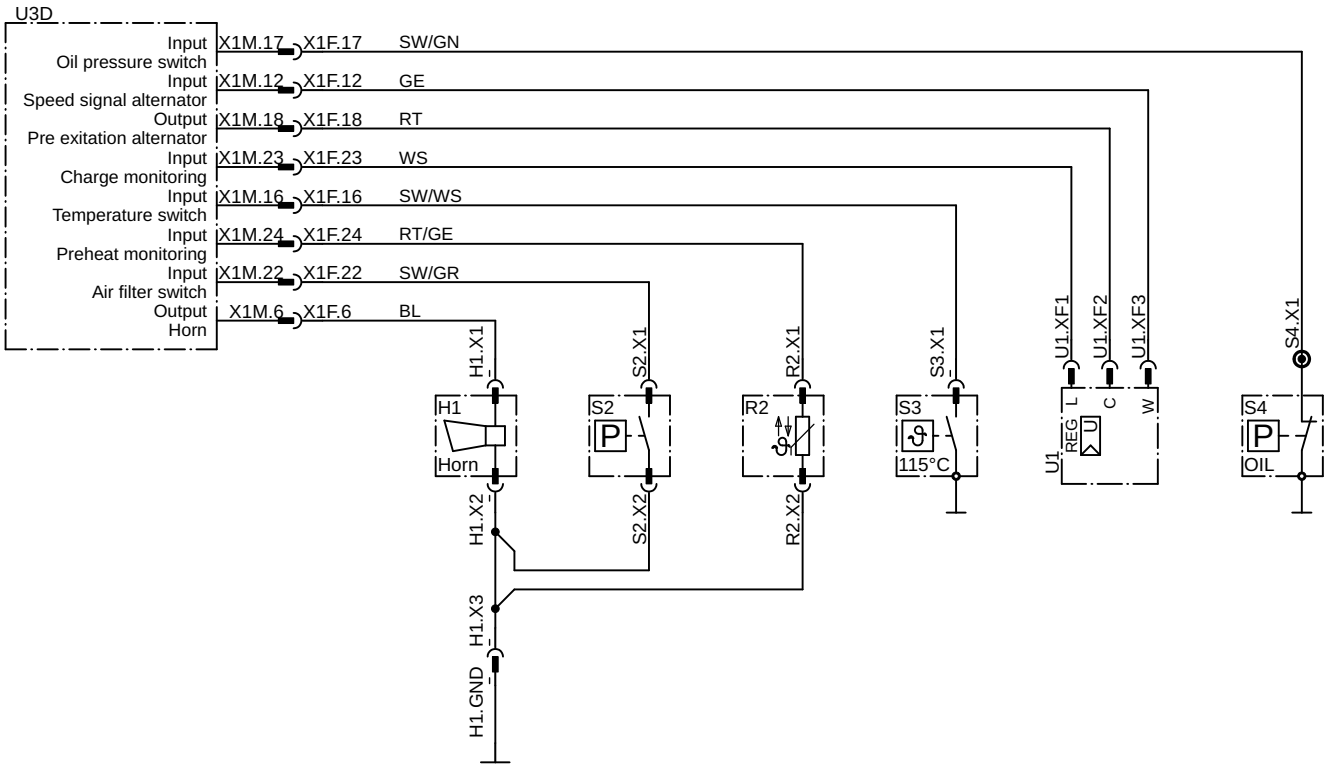

Teil	Menge	Teilenummer		Benennung 1	Benennung 2	Werkstoff

1	Zuleitungen V3.4	29.06.2021	TEE
0	Neuerstellung	12.05.2021	TEE
Index	Änderung	Datum	Name

Fertigungstoleranzen: DIN EN ISO 9013
DIN ISO 2768-mK DIN ISO 8062-CT8
DIN ISO 1302 DIN EN ISO 13920-B/F

	Name	Datum
Bearb.	B. Rothenpieler	29.06.2021
Gepr.	B. Rothenpieler	30.06.2021

Weber Maschinentechnik GmbH
Im Boden 5-8, 10
D-57334 Bad Laasphe-Rückershausen
Phone +49 (0) 2754 / 398-0
Fax +49 (0) 2754 / 398-101

Werkstoff:
Abmessung:
Zeichnungs-Nr.

Maßstab: :

Benennung: Elektroschaltplan

Masse

Masch.-Typ: MC85

Ident.-Nr.: 085000072

Druckdatum: 30.06.2021

Schutzvermerk nach DIN ISO 16016 beachten | Dokumentenart: CAD-EAGLE | Blatt 5 | Index 1 | Orig. A4

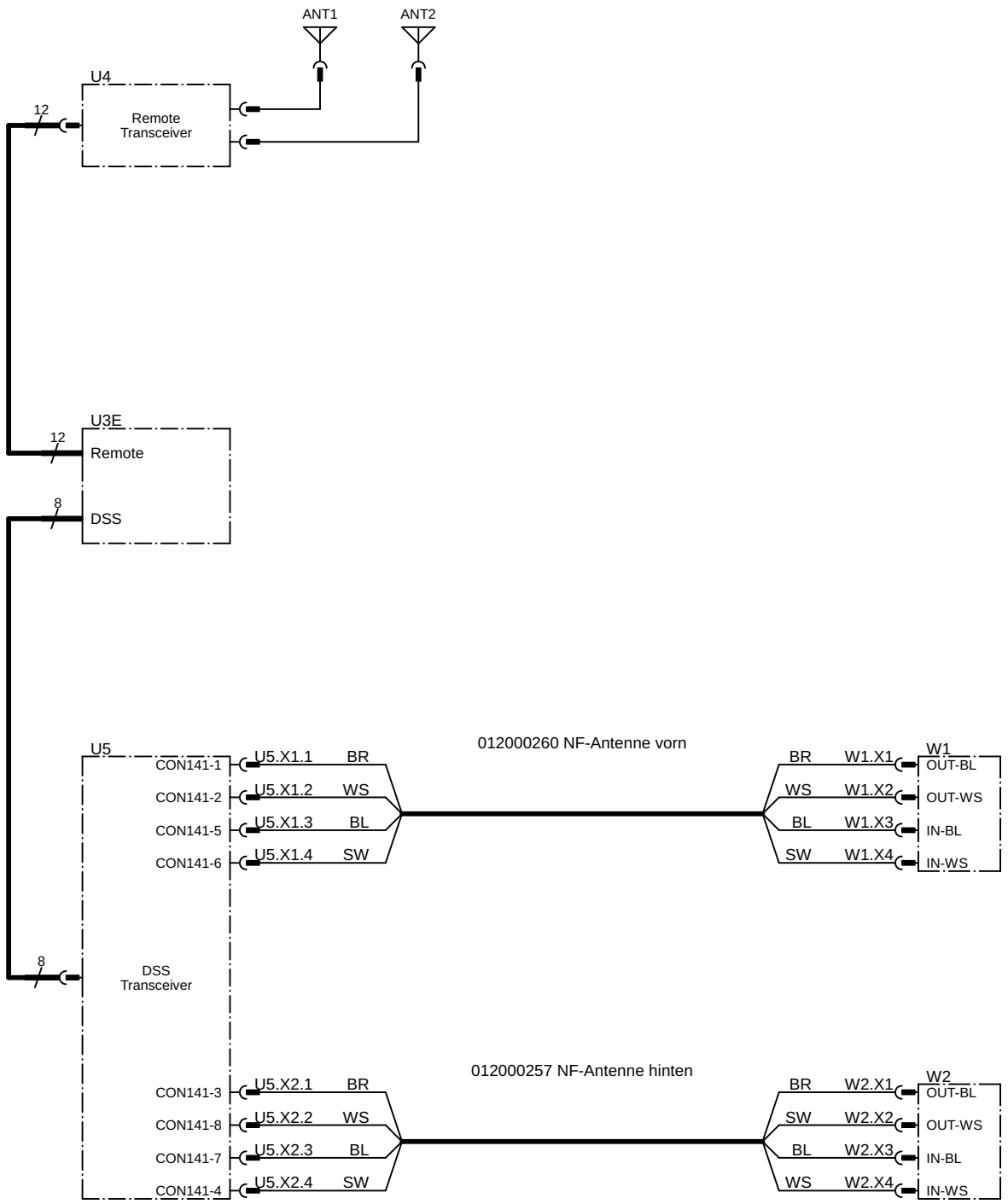

Teil	Menge	Teilenummer	Benennung 1	Benennung 2	Werkstoff

Index	Änderung	Datum	Name
1	Zuleitungen V3.4	29.06.2021	TEE
0	Neuerstellung	12.05.2021	TEE

Fertigungstoleranzen: DIN EN ISO 9013
DIN ISO 2768-mK DIN ISO 8062-CT8
DIN ISO 1302 DIN EN ISO 13920-B/F

	Name	Datum
Bearb.	B. Rothenpieler	29.06.2021
Gepr.	B. Rothenpieler	30.06.2021

Weber Maschinentechnik GmbH
Im Boden 5-8, 10
D-57334 Bad Laasphe-Rückershausen
Phone +49 (0) 2754 / 398-0
Fax +49 (0) 2754 / 398-101

Werkstoff:
Abmessung:
Zeichnungs-Nr.
Maßstab :
Masse
Benennung: Elektroschaltplan
Masch.-Typ: MC85
Ident.-Nr.: 085000072
Druckdatum: 30.06.2021
Schutzvermerk nach DIN ISO 16016 beachten
Dokumentenart: CAD-EAGLE
Blatt 6
Index 1
Orig. A4

10.6. Fuse box

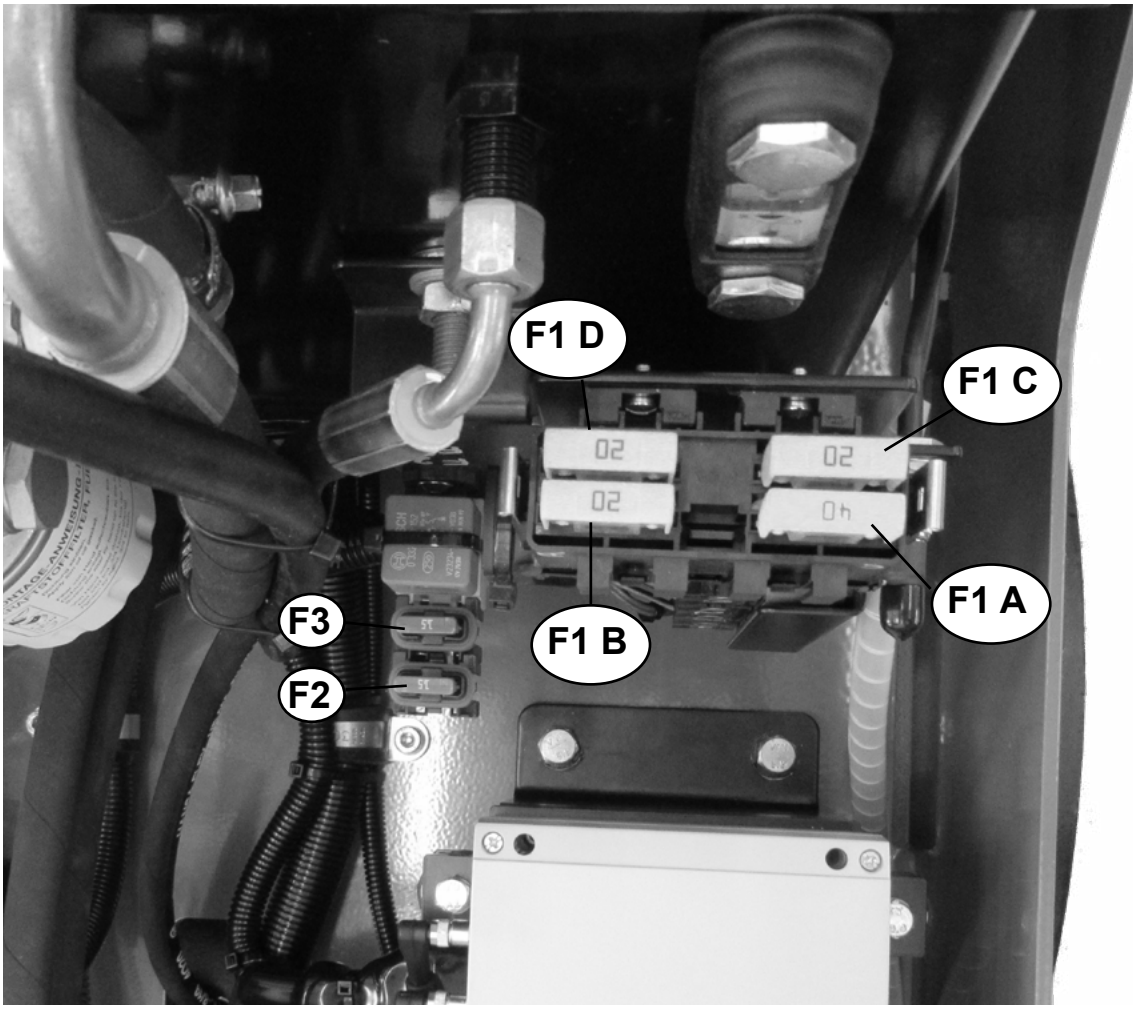

Fuse:

F1 A: Preheating, 40A
F1 B: Starter, 20A
F1 C: ETR Winding, 20A
F1 D: Throttle adjustment, 20A
F2 : ETR Holding winding, 15A
F3 : Power supply for valves and motor control, 15A

Relay:

K1: Preheating
K2: Starter
K3: ETR Winding
K4: Throttle adjustment
K5: ETR Holding winding

Annex Documents

SUPPLIER'S DECLARATION OF CONFORMITY

47 CFR § 2.1077 Compliance Information

We, the Manufacturer and Supplier:

Company Name:	*Weber Maschinentechnik GmbH*
Street Address:	*Im Boden 5-8, 10*
Postal Code & City:	*57334 Bad Laasphe*
Country:	*Germany*
Email and Phone Number:	*b.stolz@webermt.de / +49 27-5439-8428*

hereby declare that the following product:

Product Name:	*MC 85 US / MC 85 US CCD*
Product Description:	*Trench Roller (Grabenwalze)*
Model:	*000142411 / 000142413*
HS Code:	*84294010*

meet the requirements and other relevant provisions for the below Standards, when the product and its accessories are installed and used according to and following to manufacturer's instructions:

Standard Title	***Standard Number***	***Issue Date***
Directive 2006/42/EC – Machinery Directive	*2006/42/EG*	*17-May-2006*
Noise Directive 2000/14/EG	*2000/14/EG*	*08-May-2000*
Directive 2005/88/EC (Outdoor Spaces - Machines Used)	*2005/88/EG*	*14-Dec-2005*
Electromagnetic compatibility (EMC)	*2014/30/EU*	*26-Feb-2014*
Mobile Road Construction Machinery - Safety - Part 1: Common requirements	*EN 500-1: 2006+A1:2009*	*02-Dec-2009*
Mobile Road Construction Machinery - Safety - Part 4: Specific Requirements for Compaction Machines	*EN 500-4: 2011*	*30-Apr-2011*

This product contains:

Module Name	***FCC ID***	***IC***
FA12 DSS-TX – terra Fernwirktechnik GmbH	*2BG52-FA12DSSTX*	*32673-FA12DSSTX*
FA12 – Transmitter (TX) – terra Fernwirktechnik GmbH - SDoC	*Part 15B – SdoC**	*ICES-003 – SdoC**
FA12 – Receiver (RX) – terra Fernwirktechnik GmbH - SDoC	*Part 15B – SdoC**	*ICES-003 – SdoC**
FA12 – CU – terra Fernwirktechnik GmbH - SDoC	*Part 15B – SdoC*	*ICES-003 – SdoC*

*This device contains: FCC ID: V9X-LMD401 // IC: 6079A-LMD401

and in reference to the relevant test report(s) that show compliance is achieved:

Testing Laboratory	***Device & Client***	***Test Report***	***Issue Date***
TÜV NORD Hochfrequenztechnik GmbH & Co. KG	*FA12 DSS-TX / terra Fernwirktechnik GmbH*	*24013033_Rev.00 (FCC Part 15 C)*	*2024-03-28*
TÜV NORD Hochfrequenztechnik GmbH & Co. KG	*FA12 DSS-TX / terra Fernwirktechnik GmbH*	*24013035_Rev.00 (FCC Part 15 B)*	*2024-03-29*
TÜV NORD Hochfrequenztechnik GmbH & Co. KG	*FA12 DSS-TX / terra Fernwirktechnik GmbH*	*24013034_Rev.00 (RSS-210 Issue 10)*	*2024-03-28*
TÜV NORD Hochfrequenztechnik GmbH & Co. KG	*FA12 DSS-TX / terra Fernwirktechnik GmbH*	*24013036_Rev.00 (ICES-003 Issue 7)*	*2024-03-29*
TÜV NORD Hochfrequenztechnik GmbH & Co. KG	*FA12 TX / terra Fernwirktechnik GmbH*	*24013025_Rev. 00 (FCC Part 90)*	*2024-07-18* **
TÜV NORD Hochfrequenztechnik GmbH & Co. KG	*FA12 TX / terra Fernwirktechnik GmbH*	*24013026_Rev. 00 (RSS-119 Issue 12)*	*2024-07-18* **
TÜV NORD Hochfrequenztechnik GmbH & Co. KG	*FA12 TX / terra Fernwirktechnik GmbH*	*24013023_Rev. 00 (FCC Part 15 C)*	*2024-07-11*
TÜV NORD Hochfrequenztechnik GmbH & Co. KG	*FA12 TX / terra Fernwirktechnik GmbH*	*24013024_Rev. 00 (RSS-210 Issue 10)*	*2024-07-12*
TÜV NORD Hochfrequenztechnik GmbH & Co. KG	*FA12 TX / terra Fernwirktechnik GmbH*	*24013027_Rev.00 (FCC Part 15 B)*	*2024-03-25*
TÜV NORD Hochfrequenztechnik GmbH & Co. KG	*FA12 TX / terra Fernwirktechnik GmbH*	*24013028_Rev.00 (ICES-003 Issue 7)*	*2024-07-12*
TÜV NORD Hochfrequenztechnik GmbH & Co. KG	*FA12 RX / terra Fernwirktechnik GmbH*	*24013029_Rev. 00 (FCC Part 90)*	*2024-03-28* **
TÜV NORD Hochfrequenztechnik GmbH & Co. KG	*FA12-RX / terra Fernwirktechnik GmbH*	*24013030_Rev. 00 (RSS-119 Issue 12)*	*2024-03-28* **
TÜV NORD Hochfrequenztechnik GmbH & Co. KG	*FA12-RX / terra Fernwirktechnik GmbH*	*24013031_Rev.00 (FCC Part 15 B)*	*2024-03-26*
TÜV NORD Hochfrequenztechnik GmbH & Co. KG	*FA12 RX / terra Fernwirktechnik GmbH*	*24013032_Rev.00 (ICES-003 Issue 7)*	*2024-03-27*
TÜV NORD Hochfrequenztechnik GmbH & Co. KG	*FA12 CU / terra Fernwirktechnik GmbH*	*24013037_Rev.00 (FCC Part 15 B)*	*2024-07-19*
TÜV NORD Hochfrequenztechnik GmbH & Co. KG	*FA12 CU / terra Fernwirktechnik GmbH*	*24013038_Rev.00 (ICES-003 Issue 7)*	*2024-07-19*

** Sub-test report for combined devices with built-in FCC and ISED certified radio module
CIRCUIT DESIGN, INC., LMD 401
FCC ID: V9X-LMD401 // IC: 6079A-LMD401

Authorized Signature:

Name: Burkhard Stolz

Job Title: Head of Research and Development

Department: Research and Development

We Know Compaction

Company: Weber Maschinentechnik GmbH

Signature:

Date: 07.08.2024

FCC Compliance Statement FCC (Part 15B)

We, the Manufacturer and Supplier:

Company Name:	*Weber Maschinentechnik GmbH*
Street Address:	*Im Boden 5-8, 10*
Postal Code & City:	*57334 Bad Laasphe*
Country:	*Germany*
Email and Phone Number:	*b.stolz@webermt.de / +49 27-5439-8428*

hereby declare that the following product:

Product Name:	*MC 85 US / MC 85 US CCD*
Product Description:	*Trench Roller (Grabenwalze)*
Model:	*000142411 / 000142413*
HS Code:	*84294010*

Responsible Party – U-S Contact Information

Weber MT
5062 Kendrick CT., S.E.
Grand Rapids, MI
49512

Phone: 800.709.3237
Website: www.webermt.us

FCC Compliance Statement (products subject to Part 15B)
This device complies with Part 15 of the FCC Rules. Operation is subject to the following two conditions:
(1) This device may not cause harmful interference, and
(2) this device must accept any interference received, including interference that may cause undesired operation.

Warning (Part 15.21)
Changes or modifications not expressly approved by the party responsible for compliance could void the user's authority to operate the equipment.

The equipment contains both unintentional radiators and intentional radiators within product. The unintentional radiator portion is being authorized under SDoC, while the intentional radiator (e.g., radio transmitter) contained in the equipment is certified.

Company:	Weber Maschinentechnik GmbH	**Date:**	09/08/2024
Name:	Burkhard Stolz	**Signature:**	
Job Title:	Head of Research and Development		
Department:	Research and Development		

Compliance Statement FCC (Part 15.19) for USA

Transmitter
Model: FA12 TX
This device contains transceiver LMD-401 from CircuitDesign Inc.
FCC ID: V9X-LMD401
IC: 6079A-LMD401

Receiver
Model: FA12 RX
This device contains transceiver LMD-401 from CircuitDesign Inc.
FCC ID: V9X-LMD401
IC: 6079A-LMD401

Nearfield generator
Model: FA12 DSS-TX
FCC ID: 2BG52-FA12DSST
IC: 32673-FA12DSST

This device complies with Part 15 of the FCC Rules. Operation is subject to the following two conditions:
1. This device may not cause harmful interference, and
2. This device must accept any interference received, including interference that may cause undesired operation.

Warning (Part 15.21)
Changes or modifications not expressly approved by the party responsible for compliance could void the user's authority to operate the equipment.

FCC Interference Statement (Part 15.105 (b))
This equipment has been tested and found to comply with the limits for a Class B digital device, pursuant to Part 15 of the FCC Rules. These limits are designed to provide reasonable protection against harmful interference in a residential installation. This equipment generates uses and can radiate radio frequency energy and, if not installed and used in accordance with the instructions, may cause harmful interference to radio communications. However, there is no guarantee that interference will not occur in a particular installation. If this equipment does cause harmful interference to radio or television reception, which can be determined by turning the equipment off and on, the user is encouraged to try to correct the interference by one of the following measures:
- Reorient or relocate the receiving antenna.
- Increase the separation between the equipment and receiver.
- Connect the equipment into an outlet on a circuit different from that to which the receiver is connected.
- Consult the dealer or an experienced radio/TV technician for help.

This equipment complies with FCC radiation exposure limits sets forth for an uncontrolled environment.
This equipment should be installed and operated with minimum distance of 20 cm between the radiator and your body.
This transceiver (LMD-401) must not be co-located or operating in conjunction with any other antenne or transmitter.

Compliance Statement IC (Section 8.4 of RSS-GEN) for Canada

Transmitter
Model: FA12 TX
This device contains transceiver LMD-401 from CircuitDesign Inc.
FCC ID: V9X-LMD401
IC: 6079A-LMD401

Receiver
Model: FA12 RX
This device contains transceiver LMD-401 from CircuitDesign Inc.
FCC ID: V9X-LMD401
IC: 6079A-LMD401

Nearfield generator
Model: FA12 DSS-TX
FCC ID: 2BG52-FA12DSST
IC: 32673-FA12DSST

In ADDITION to the FCC compliance statement:

(See: https://ised-isde.canada.ca/site/spectrum-management-telecommunications/en/devices-and-equipment/radio-equipment-standards/radio-standards-specifications-rss/rss-gen-general-requirements-compliance-radio-apparatus#s8.4)

This device contains licence-exempt transmitter(s)/receiver(s) that comply with Innovation, Science and Economic Development Canada's licence-exempt RSS(s). Operation is subject to the following two conditions:
(1) This device may not cause interference.
(2) This device must accept any interference, including interference that may cause undesired operation of the device.

Le présent appareil est conforme aux CNR d'Industrie Canada applicables aux appareils radio exempts de licence. L'exploitation est autorisée aux deux conditions suivantes:
(1) l'appareil ne doit pas produire de brouillage, et
(2) l'utilisateur de l'appareil doit accepter tout brouillage radioélectrique subi, même si le brouillage est susceptible d'en compromettre le fonctionnement.

This equipment complies with ISED radiation exposure limits set forth for an uncontrolled environment. This equipment should be installed and operated with minimum distance of 20 cm between the radiator and your body. This transmitter must not be co-located or operating in conjunction with any other antenna or transmitter.

Cet équipement est conforme aux limites d'exposition aux rayonnements ISED établies pour un environnement non contrôlé.
Cet équipement doit être installé et utilisé avec un minimum de 20 cm de distance entre la source de rayonnement et votre corps.
Ce transmetteur ne doit pas etre place au meme endroit ou utilise simultanement avec un autre transmetteur ou antenne.

facebook.com/WeberMT

youtube.com/MyWeberMT

Weber Maschinentechnik GmbH
Im Boden 5 – 8, 10 · 57334 Bad Laasphe · Germany
Phone +49 2754 398 0 · Fax +49 2754 398 101
info@webermt.de · www.webermt.de

085103151-104 / MC 85_2024-08
Original instructions